2009 Brute Force 650 4x4 Hardwoods Green HD

Kawasaki
Let the Good Times Roll®

PARTS DIAGRAM

Air Cleaner

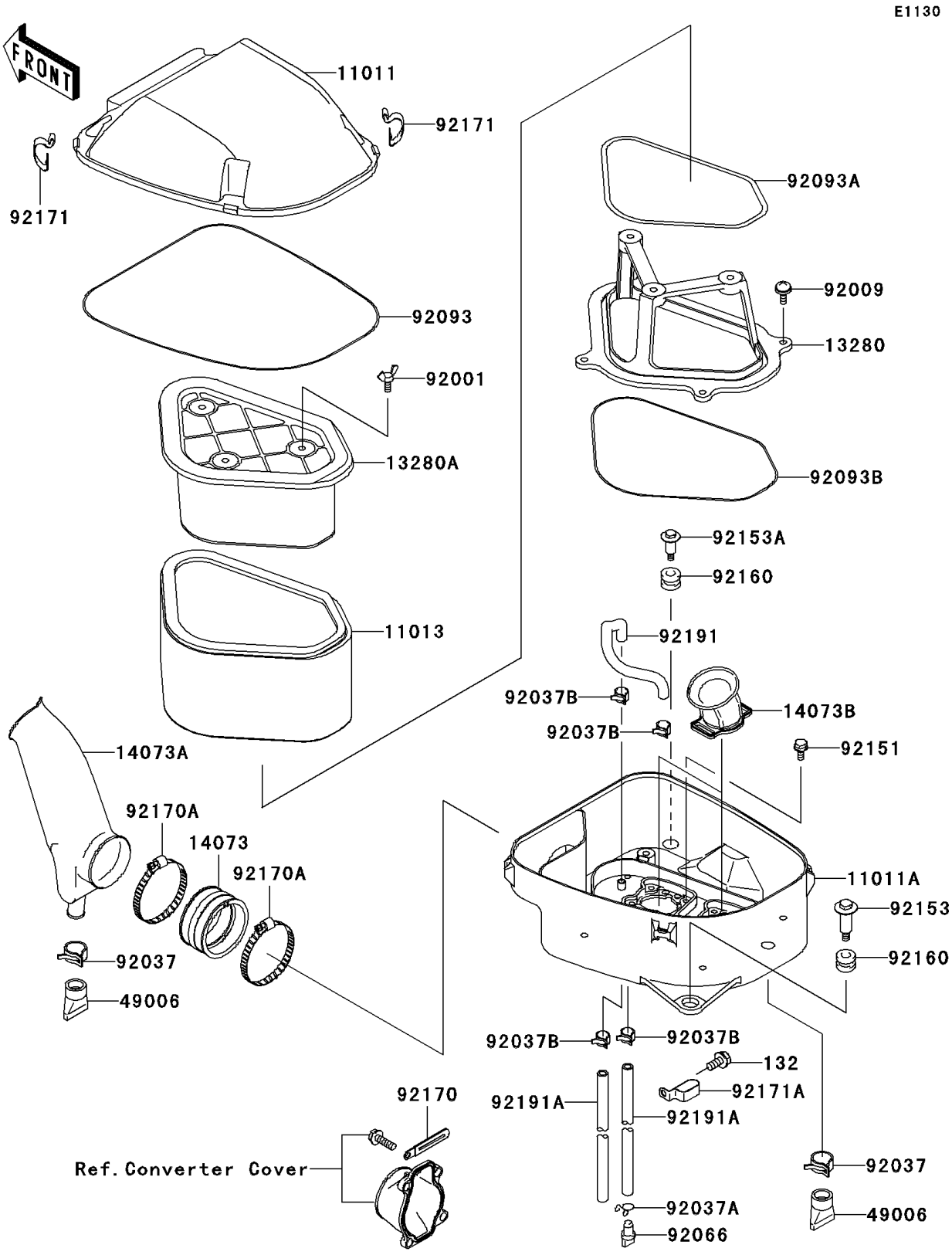

© 2026 Kawasaki Motors Corp., U.S.A.

2009 Brute Force 650 4x4 Hardwoods Green HD

Kawasaki
Let the Good Times Roll®

PARTS LIST

Air Cleaner

ITEM NAME	PART NUMBER	QUANTITY
BOLT-FLANGED-SMALL,6X12 (Ref # 132)	132BD0612	1
CASE-AIR FILTER,UPP (Ref # 11011)	11011-0046	1
CASE-AIR FILTER,LWR (Ref # 11011A)	11011-0047	1
ELEMENT-AIR FILTER (Ref # 11013)	11013-0001	1
HOLDER (Ref # 13280)	13280-0111	1
HOLDER (Ref # 13280A)	13280-1272	1
DUCT,JOINT (Ref # 14073)	14073-1775	1
DUCT,INTAKE (Ref # 14073A)	14073-1778	1
DUCT,AIR FANNEL (Ref # 14073B)	14073-1830	2
BOOT (Ref # 49006)	49006-1292	2
BOLT,WING,6X15 (Ref # 92001)	92001-1703	3
SCREW,6X16 (Ref # 92009)	92009-1621	4
CLAMP,HOSE CLIP (Ref # 92037)	92037-1460	2
CLAMP,TUBE (Ref # 92037A)	92037-147	1
CLAMP,TUBE (Ref # 92037B)	92037-1505	4
PLUG,DRAIN (Ref # 92066)	92066-1211	1
SEAL,AIR FILTER CASE (Ref # 92093)	92093-1522	1
SEAL,HOLDER-HOLDER (Ref # 92093A)	92093-1569	1
SEAL (Ref # 92093B)	92093-1570	1
BOLT,FLANGED,5X12 (Ref # 92151)	92151-1305	8
BOLT,AIR FILTER,LH (Ref # 92153)	92153-1051	1
BOLT,FLANGED,6X28.7 (Ref # 92153A)	92153-1052	1
DAMPER (Ref # 92160)	92160-1594	2
CLAMP (Ref # 92170)	92170-1514	1
CLAMP (Ref # 92170A)	92170-1764	2
CLAMP,AIR FILTER CASE (Ref # 92171)	92171-1394	4
CLAMP,AIR VENT (Ref # 92171A)	92171-1522	1
TUBE,7X11X210 (Ref # 92191)	92191-1494	1
TUBE,7X11X470 (Ref # 92191A)	92191-1531	2

© 2026 Kawasaki Motors Corp., U.S.A.