2019 Z125 PRO

PARTS DIAGRAM

Frame Fittings

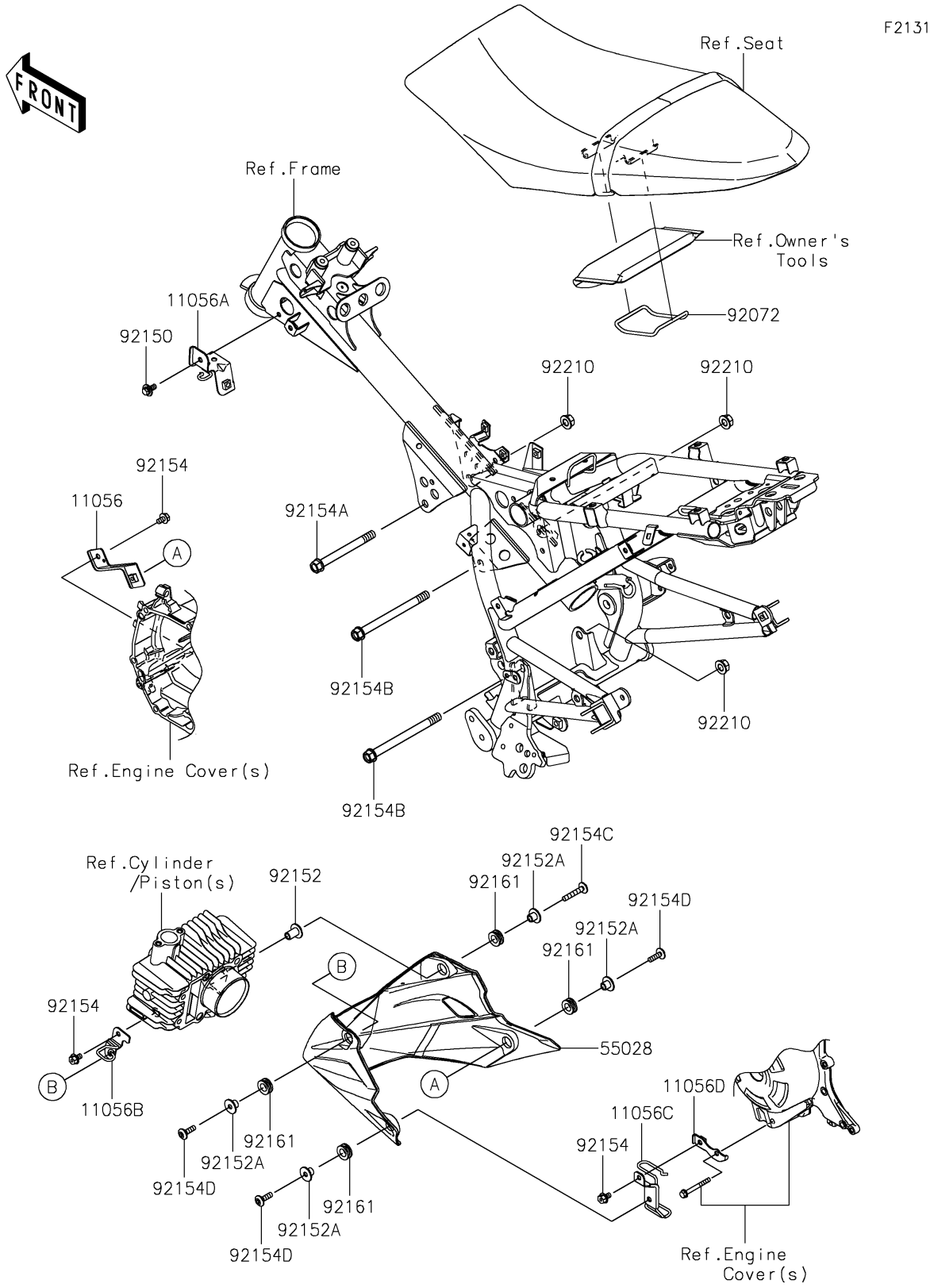

© 2026 Kawasaki Motors Corp., U.S.A.

2019 Z125 PRO

PARTS LIST

Frame Fittings

ITEM NAME	PART NUMBER	QUANTITY
BRACKET,RR,RH (Ref # 11056)	11056-7592	1
BRACKET (Ref # 11056A)	11056-7593	1
BRACKET,FR,LH (Ref # 11056B)	11056-7607	1
BRACKET,RR,LH (Ref # 11056C)	11056-7608	1
BRACKET,GENERATOR COVER (Ref # 11056D)	11056-7718	1
COWLING,LWR,F.BLACK (Ref # 55028)	55028-0562-6Z	1
BAND,TOOL (Ref # 92072)	92072-0781	1
BOLT,6X14 (Ref # 92150)	92150-1340	1
COLLAR,6.5X10X18 (Ref # 92152)	92152-1560	1
COLLAR,6.5X10X10.4 (Ref # 92152A)	92152-1688	4
BOLT,FLANGED,6X10 (Ref # 92154)	92154-1256	3
BOLT,FLANGED,10X100 (Ref # 92154A)	92154-1257	1
BOLT,FLANGED,10X125 (Ref # 92154B)	92154-1258	2
BOLT,SOCKET,6X35 (Ref # 92154C)	92154-2121	1
BOLT,SOCKET,6X20 (Ref # 92154D)	92154-2122	3
DAMPER,10X20X8 (Ref # 92161)	92161-1828	4
NUT,FLANGED,10MM (Ref # 92210)	92210-0869	3

© 2026 Kawasaki Motors Corp., U.S.A.