2019 Z125 PRO

PARTS DIAGRAM

Gear Change Mechanism

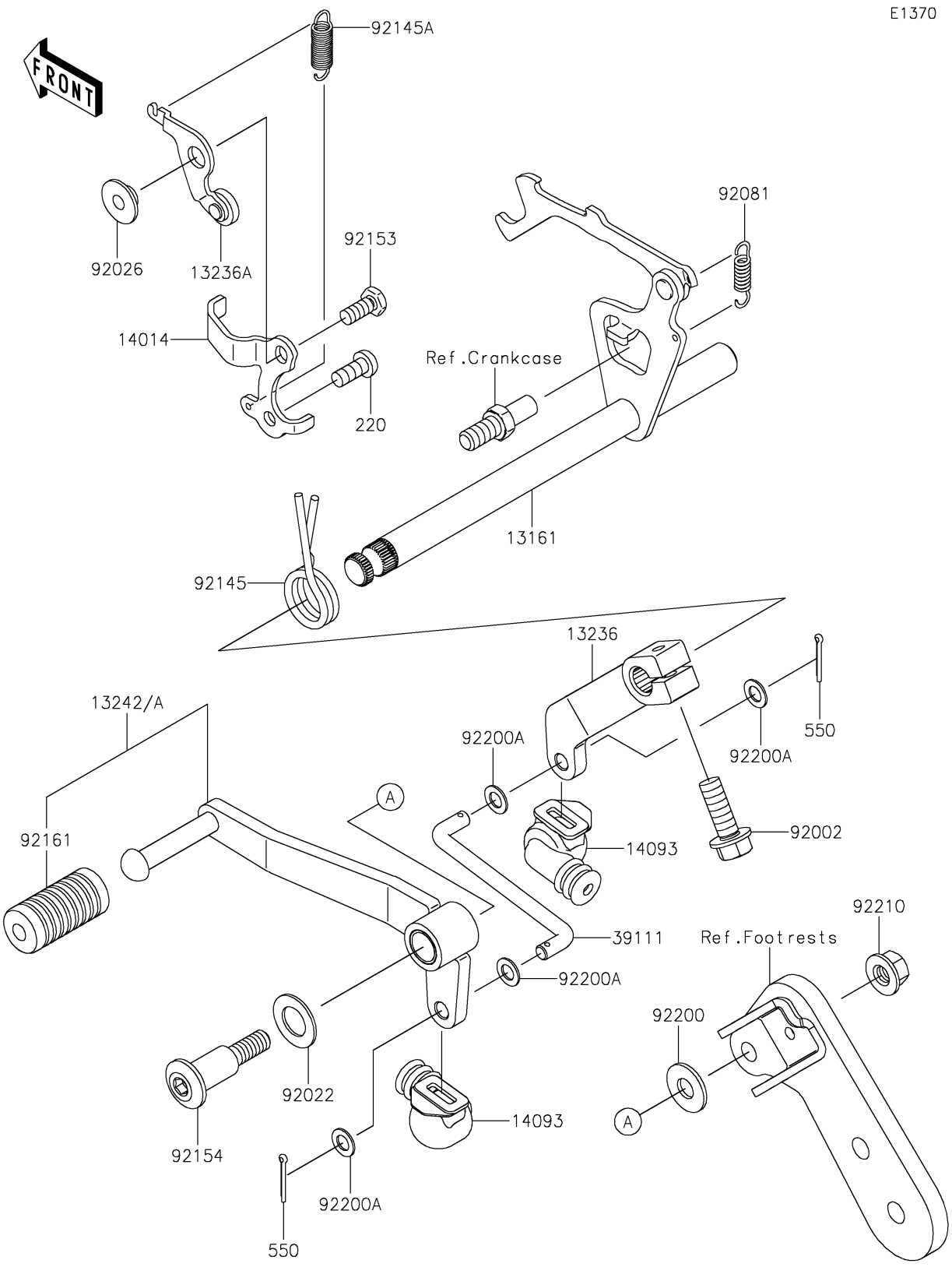

© 2026 Kawasaki Motors Corp., U.S.A.

2019 Z125 PRO

PARTS LIST

Gear Change Mechanism

ITEM NAME	PART NUMBER	QUANTITY
LEVER-COMP-CHANGE SHAFT (Ref # 13161)	13161-0575	1
LEVER-COMP (Ref # 13236)	13236-0766	1
LEVER-COMP,POSITION (Ref # 13236A)	13236-1256	1
LEVER-ASSY-CHANGE,PEDAL (Ref # 13242A)	13242-0136	1
PLATE-POSITION (Ref # 14014)	14014-0558	1
COVER (Ref # 14093)	14093-0321	2
SCREW-PAN-CROS,6X14 (Ref # 220)	220AA0614	1
ROD-TIE (Ref # 39111)	39111-0340	1
PIN-COTTER,2.0X15 (Ref # 550)	550AA2015	2
BOLT,6X20 (Ref # 92002)	92002-1237	1
WASHER,12.5X22X1.2 (Ref # 92022)	92022-072	1
SPACER (Ref # 92026)	92026-1217	1
SPRING,CHANGE LEVER (Ref # 92081)	92081-076	1
SPRING,CHANGE SHAFT RETURN (Ref # 92145)	92145-0984	1
SPRING,CHANGE LEVER (Ref # 92145A)	92145-0986	1
BOLT,6X14 (Ref # 92153)	92153-0571	1
BOLT (Ref # 92154)	92154-1305	1
DAMPER,CHANGE PEDAL (Ref # 92161)	92161-1357	1
WASHER,8.5X20X1.6 (Ref # 92200)	92200-0490	1
WASHER,6.3X15X1.6 (Ref # 92200A)	92200-1821	4
NUT,FLANGED,8MM (Ref # 92210)	92210-1376	1

© 2026 Kawasaki Motors Corp., U.S.A.