2008 KLX®140

PARTS DIAGRAM

Rear Master Cylinder

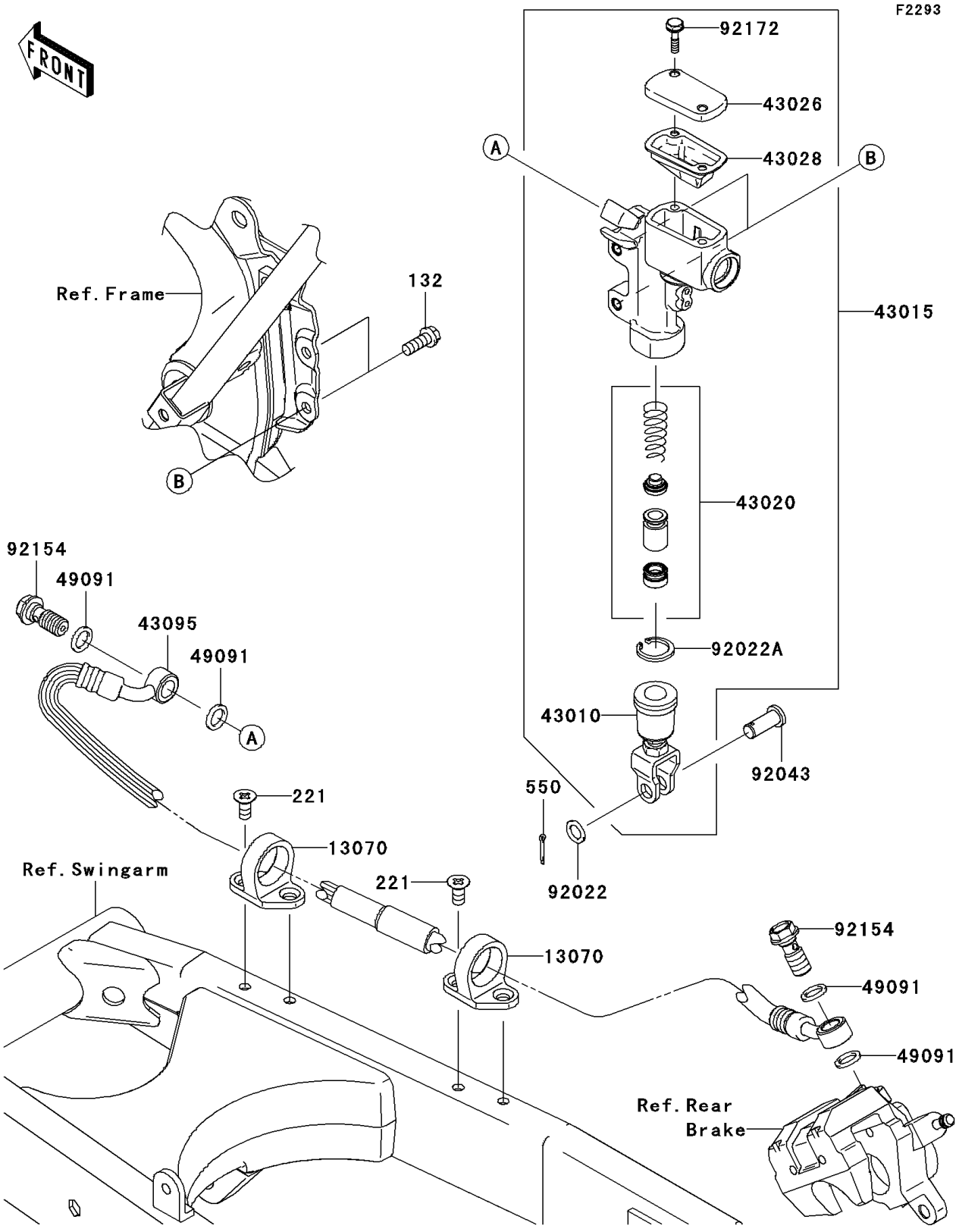

© 2026 Kawasaki Motors Corp., U.S.A.

2008 KLX®140

PARTS LIST

Rear Master Cylinder

ITEM NAME	PART NUMBER	QUANTITY
BOLT-FLANGED-SMALL,6X16 (Ref # 132)	132BA0616	2
SCREW-CSK-CROS,6X10 (Ref # 221)	221AA0610	4
PIN-COTTER,2.0X15 (Ref # 550)	550AA2015	1
GUIDE,HOSE (Ref # 13070)	13070-1144	2
ROD-ASSY-BRAKE (Ref # 43010)	43010-0006	1
CYLINDER-ASSY-MASTER,RR (Ref # 43015)	43015-0099	1
PISTON-COMP-BRAKE (Ref # 43020)	43020-1094	1
CAP-BRAKE (Ref # 43026)	43026-0008	1
DIAPHRAGM (Ref # 43028)	43028-1092	1
HOSE-BRAKE,RR (Ref # 43095)	43095-0336	1
WASHER-SEAL,10.1X14.5X1.5 (Ref # 49091)	49091-0001	4
WASHER,8.5X13X1 (Ref # 92022)	92022-1028	1
WASHER,CIRCRIP (Ref # 92022A)	92022-1601	1
PIN (Ref # 92043)	92043-0004	1
BOLT,OIL,L=23 (Ref # 92154)	92154-0226	2
SCREW (Ref # 92172)	92172-0286	2

© 2026 Kawasaki Motors Corp., U.S.A.