2017 Versys 650 ABS

PARTS DIAGRAM

Gear Change Mechanism

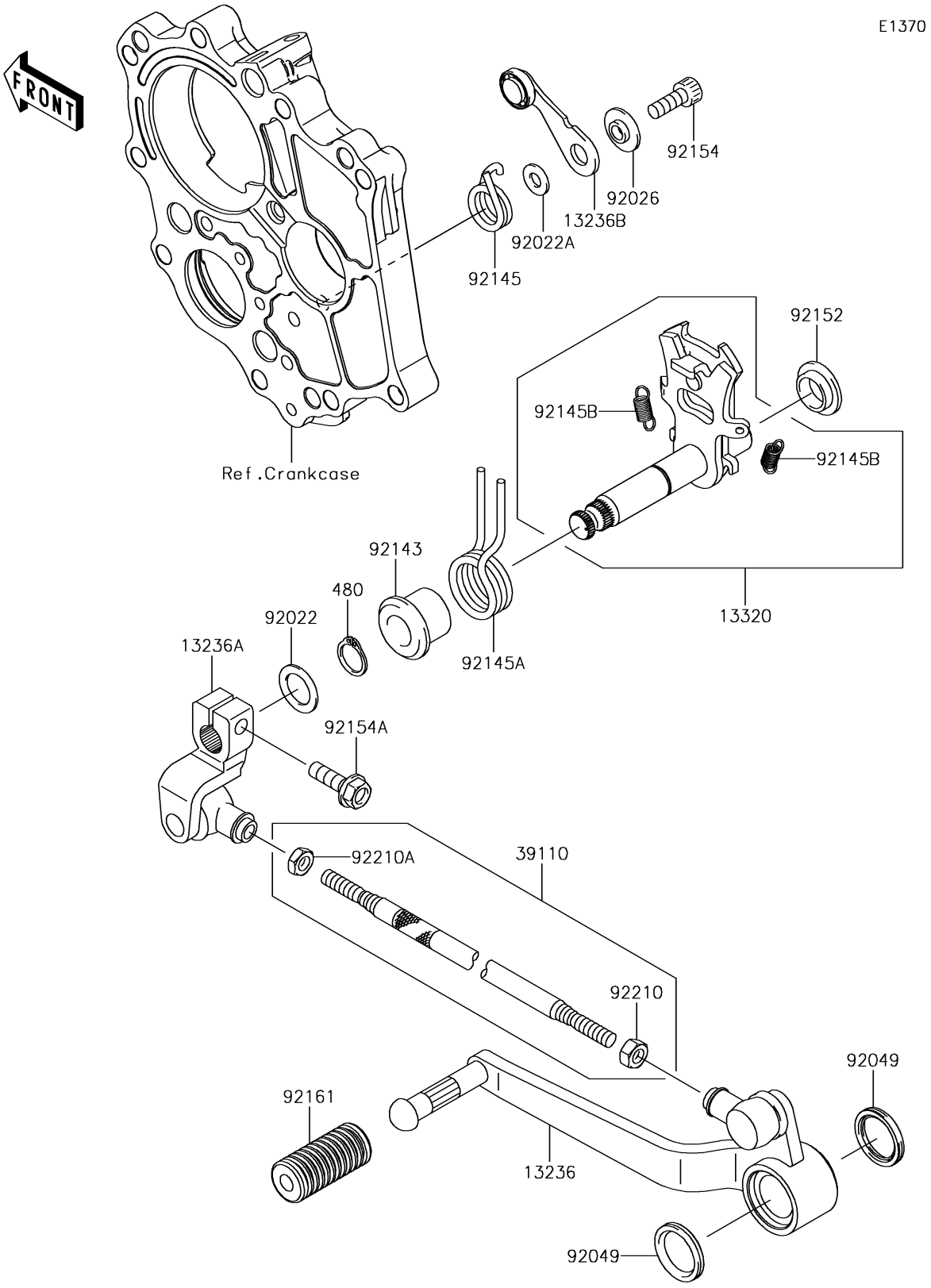

© 2026 Kawasaki Motors Corp., U.S.A.

2017 Versys 650 ABS

PARTS LIST

Gear Change Mechanism

ITEM NAME	PART NUMBER	QUANTITY
LEVER-COMP,PEDAL (Ref # 13236)	13236-0136	1
LEVER-COMP (Ref # 13236A)	13236-0137	1
LEVER-COMP,POSITION (Ref # 13236B)	13236-0170	1
LEVER-ASSY,CHANGE SHAFT (Ref # 13320)	13320-0032	1
ROD-ASSY-TIE (Ref # 39110)	39110-0033	1
CIRCLIP-TYPE-C,13MM (Ref # 480)	480J1300	1
WASHER,13.3X20X1 (Ref # 92022)	92022-1496	1
WASHER,6X12.8X1.2 (Ref # 92022A)	92022-1827	1
SPACER (Ref # 92026)	92026-1217	1
SEAL-OIL (Ref # 92049)	92049-0103	2
COLLAR,RETURN SPRING (Ref # 92143)	92143-1498	1
SPRING,POSITION (Ref # 92145)	92145-0304	1
SPRING,RETURN (Ref # 92145A)	92145-0326	1
SPRING,5.5X0.7X18 (Ref # 92145B)	92145-0703	2
COLLAR (Ref # 92152)	92152-1075	1
BOLT,SOCKET,6X16 (Ref # 92154)	92154-0235	1
BOLT,FLANGED,6X20 (Ref # 92154A)	92154-0786	1
DAMPER,CHANGE PEDAL (Ref # 92161)	92161-1300	1
NUT,6MM (Ref # 92210)	92210-1100	1
NUT,LEFT HANDED,6MM (Ref # 92210A)	92210-1101	1

© 2026 Kawasaki Motors Corp., U.S.A.