2017 Versys 650 ABS

PARTS DIAGRAM

Valve(s)

E1210



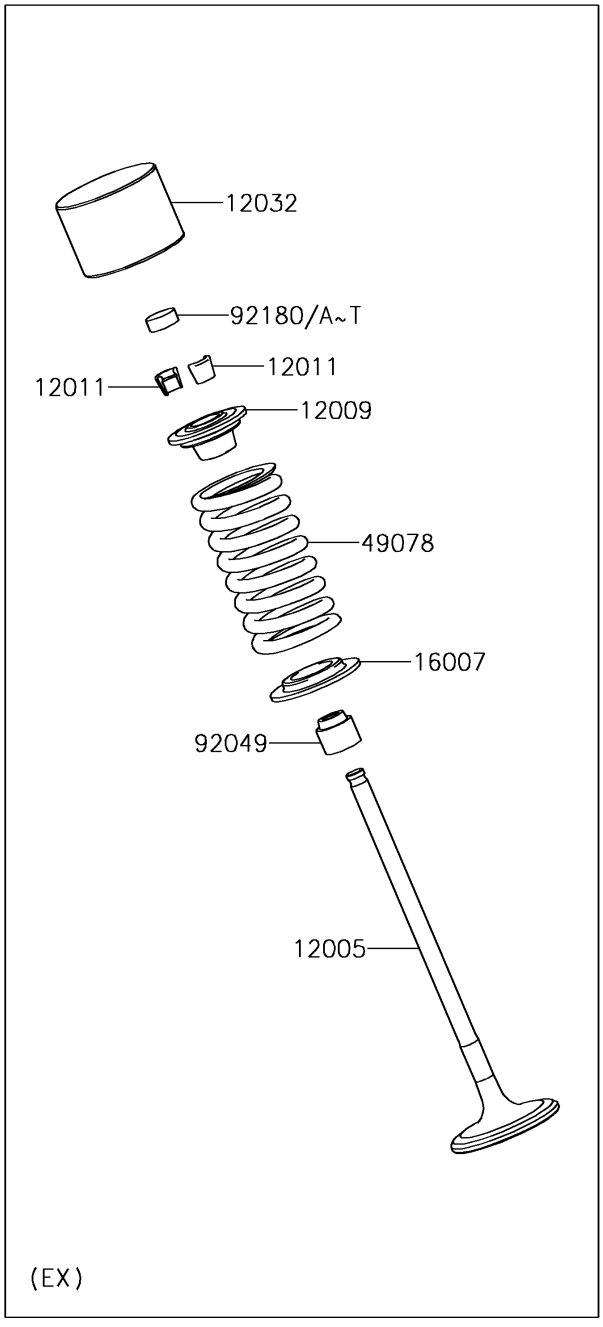

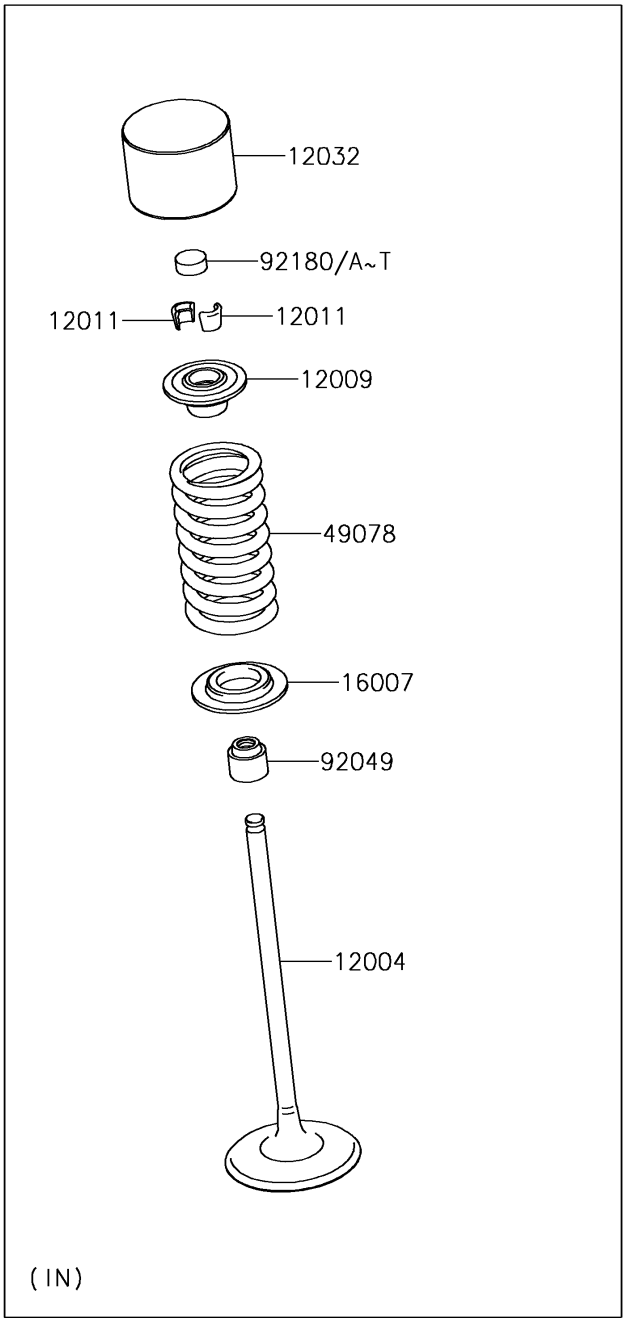

© 2026 Kawasaki Motors Corp., U.S.A.

2017 Versys 650 ABS

PARTS LIST

Valve(s)

ITEM NAME	PART NUMBER	QUANTITY

© 2026 Kawasaki Motors Corp., U.S.A.