2017 Versys 650 ABS

PARTS DIAGRAM

Cylinder Head Cover

E1112

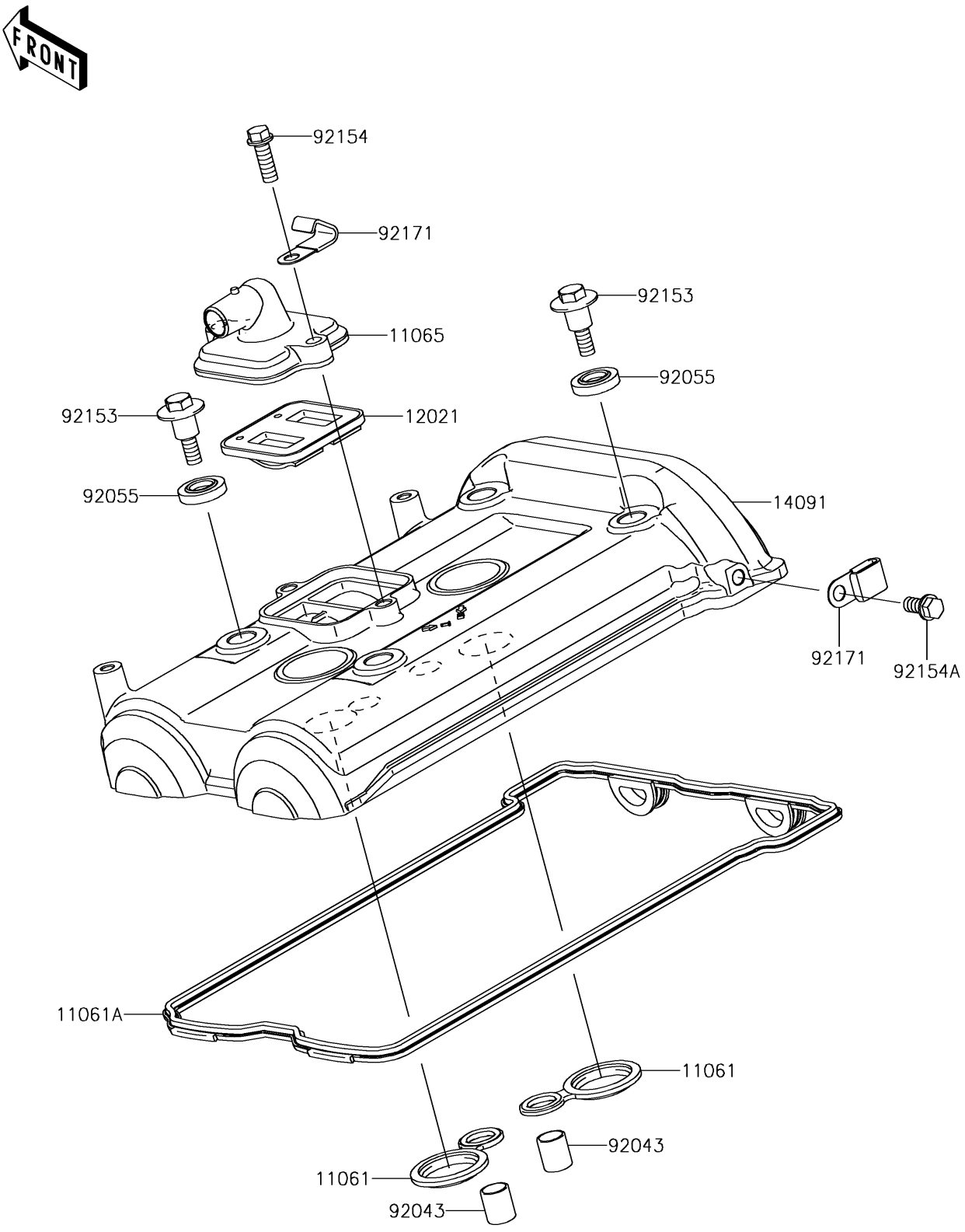

© 2026 Kawasaki Motors Corp., U.S.A.

2017 Versys 650 ABS

PARTS LIST

Cylinder Head Cover

ITEM NAME	PART NUMBER	QUANTITY
GASKET,SPARK PLUG HOLE (Ref # 11061)	11061-0105	2
GASKET,HEAD COVER (Ref # 11061A)	11061-0170	1
CAP (Ref # 11065)	11065-0709	1
VALVE-ASSY-REED (Ref # 12021)	12021-0708	1
COVER,HEAD (Ref # 14091)	14091-1702	1
PIN,10.1X12X14 (Ref # 92043)	92043-4009	2
RING-O,HEAD COVER BOLT (Ref # 92055)	92055-0195	4
BOLT,HEAD COVER (Ref # 92153)	92153-0793	4
BOLT,FLANGED,6X18 (Ref # 92154)	92154-1775	2
BOLT,FLANGED,6X12 (Ref # 92154A)	92154-1776	1
CLAMP (Ref # 92171)	92171-0813	2

© 2026 Kawasaki Motors Corp., U.S.A.