2017 KLX®140G

PARTS DIAGRAM

Frame Fittings

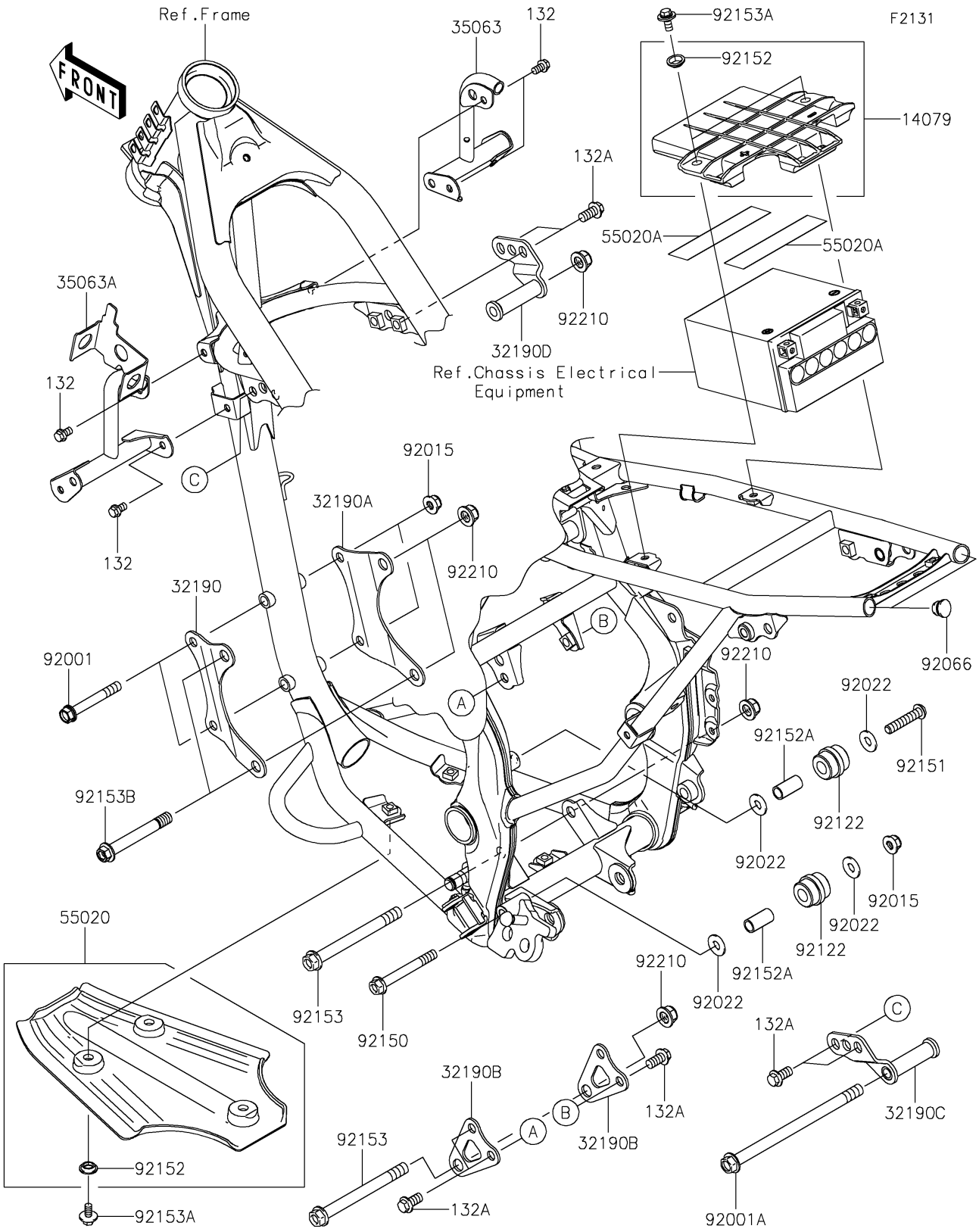

© 2026 Kawasaki Motors Corp., U.S.A.

2017 KLX®140G

PARTS LIST

Frame Fittings

ITEM NAME	PART NUMBER	QUANTITY
BOLT-FLANGED-SMALL,6X10 (Ref # 132)	132BA0610	4
BOLT-FLANGED-SMALL,8X16 (Ref # 132A)	132BA0816	8
HOLDER-ASSY,BATTERY (Ref # 14079)	14079-0031	1
BRACKET-ENGINE,FR,LH (Ref # 32190)	32190-0308	1
BRACKET-ENGINE,FR,RH (Ref # 32190A)	32190-0309	1
BRACKET-ENGINE,RR (Ref # 32190B)	32190-0310	2
BRACKET-ENGINE,HEAD,LH (Ref # 32190C)	32190-0311	1
BRACKET-ENGINE,HEAD,RH (Ref # 32190D)	32190-0312	1
STAY,SHROUD,RH,P.SILVER (Ref # 35063)	35063-1340-458	1
STAY,SHROUD,LH,P.SILVER (Ref # 35063A)	35063-1341-458	1
GUARD (Ref # 55020)	55020-0409	1
GUARD (Ref # 55020A)	55020-0429	2
BOLT,FLANGED,8X60 (Ref # 92001)	92001-1581	2
BOLT,FLANGED,10X160 (Ref # 92001A)	92001-1653	1
NUT,8MM (Ref # 92015)	92015-1432	3
WASHER,8.5X20X1.6 (Ref # 92022)	92022-1561	4
PLUG,FRAME END,12X13 (Ref # 92066)	92066-1034	2
ROLLER,GUIDE CHAIN (Ref # 92122)	92122-0041	2
BOLT,FLANGED,8X65 (Ref # 92150)	92150-1036	1
BOLT,SOCKET,8X40 (Ref # 92151)	92151-1205	1
COLLAR,8.8X11.2X4 (Ref # 92152)	92152-0909	5
COLLAR,9.5X12.5X25 (Ref # 92152A)	92152-0943	2
BOLT,FLANGED,10X105 (Ref # 92153)	92153-0614	2
BOLT,FLANGED,6X14 (Ref # 92153A)	92153-0936	5
BOLT,FLANGED,10X77 (Ref # 92153B)	92153-1613	2
NUT,LOCK,FLANGED,10MM (Ref # 92210)	92210-1080	5

© 2026 Kawasaki Motors Corp., U.S.A.