2020 KLX®140G

PARTS DIAGRAM

Oil Pump

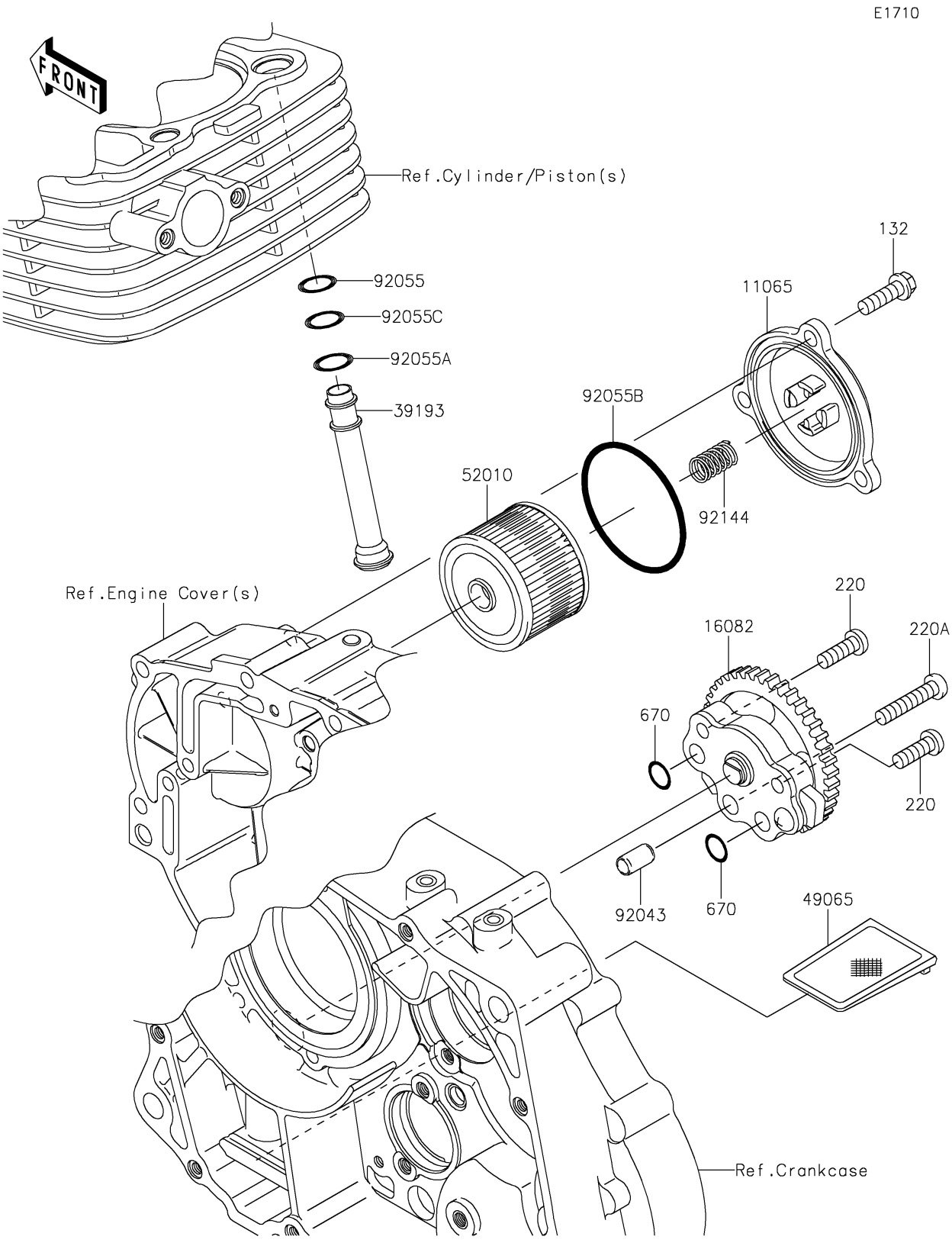

© 2026 Kawasaki Motors Corp., U.S.A.

2020 KLX®140G

PARTS LIST

Oil Pump

ITEM NAME	PART NUMBER	QUANTITY
CAP (Ref # 11065)	11065-0255	1
BOLT-FLANGED-SMALL,6X20 (Ref # 132)	132BA0620	3
PUMP-ASSY-OIL (Ref # 16082)	16082-1159	1
SCREW-PAN-CROS,6X18 (Ref # 220)	220AA0618	2
SCREW-PAN-CROS,6X30 (Ref # 220A)	220AA0630	1
PIPE-OIL (Ref # 39193)	39193-0578	1
FILTER-OIL (Ref # 49065)	49065-0021	1
ELEMENT-OIL FILTER (Ref # 52010)	52010-1053	1
O RING,9.8X1.9 (Ref # 670)	670B1510	2
PIN,6.2X8X14 (Ref # 92043)	92043-1263	1
RING-O,9.8X1.9 (Ref # 92055)	92055-0061	1
RING-O,12.8X1.9 (Ref # 92055A)	92055-0152	1
RING-O,59.6X2.4 (Ref # 92055B)	92055-0201	1
RING-O,9.8X2.4 (Ref # 92055C)	92055-1150	1
SPRING (Ref # 92144)	92144-1892	1

© 2026 Kawasaki Motors Corp., U.S.A.