2020 KLX®140G

PARTS DIAGRAM

Transmission

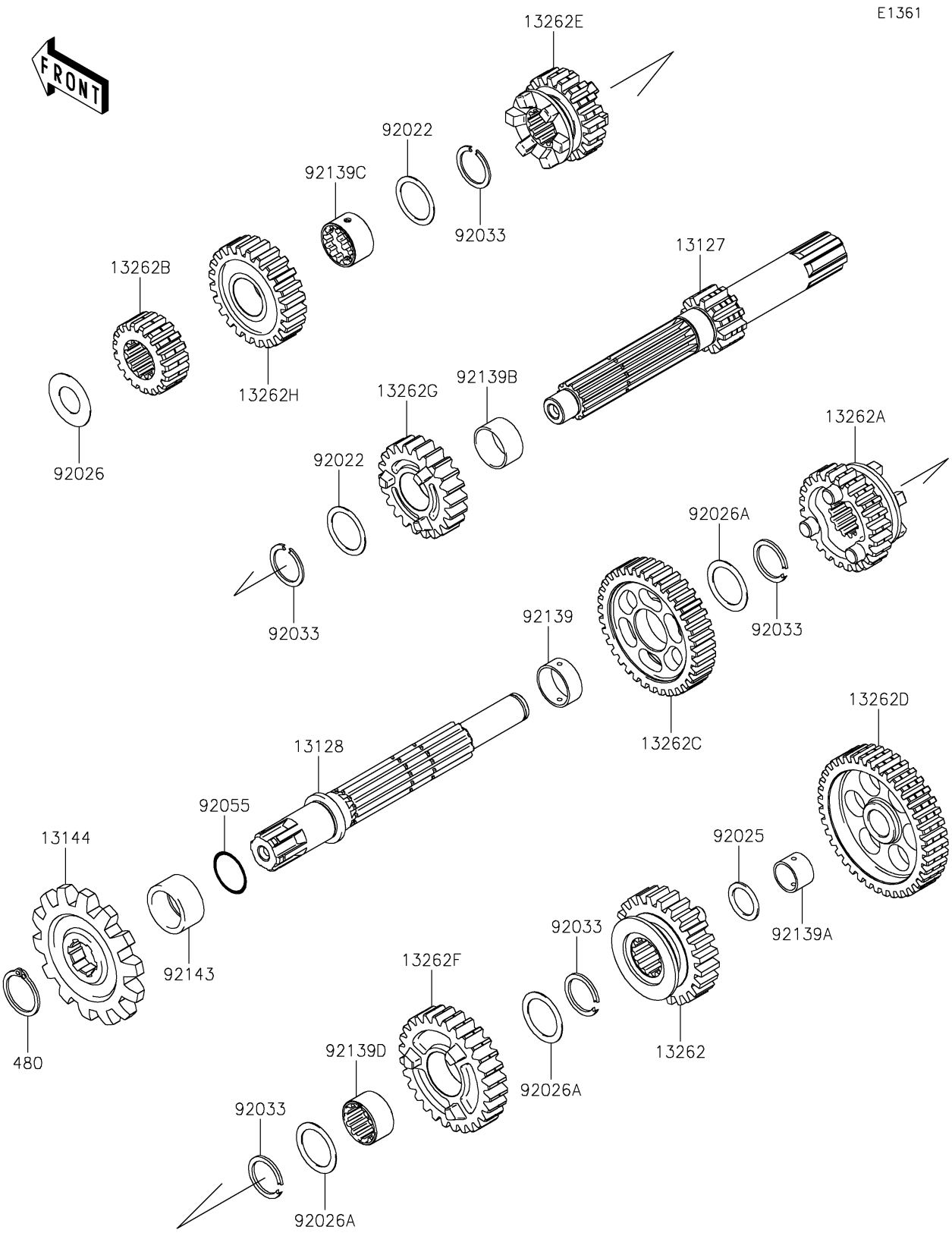

© 2026 Kawasaki Motors Corp., U.S.A.

2020 KLX®140G

PARTS LIST

Transmission

ITEM NAME	PART NUMBER	QUANTITY
SHAFT-TRANSMISSION INPUT,15T (Ref # 13127)	13127-0074	1
SHAFT-TRANSMISSION OUTPUT (Ref # 13128)	13128-0051	1
SPROCKET-OUTPUT,13T (Ref # 13144)	13144-0045	1
GEAR,OUTPUT 4TH,26T (Ref # 13262)	13262-0459	1
GEAR,OUTPUT 5TH,24T (Ref # 13262A)	13262-0502	1
GEAR,INPUT 2ND,19T (Ref # 13262B)	13262-0577	1
GEAR,OUTPUT 2ND,36T (Ref # 13262C)	13262-0578	1
GEAR,OUTPUT LOW,40T (Ref # 13262D)	13262-0579	1
GEAR,INPUT 3RD,19T (Ref # 13262E)	13262-0662	1
GEAR,OUTPUT 3RD,28T (Ref # 13262F)	13262-0738	1
GEAR,INPUT 4TH,22T (Ref # 13262G)	13262-0769	1
GEAR,INPUT 5TH,24T (Ref # 13262H)	13262-0770	1
CIRCLIP-TYPE-C,17MM (Ref # 480)	480J1700	1
WASHER,17.3X22X0.5 (Ref # 92022)	92022-1799	2
SHIM (Ref # 92025)	92025-1280	1
SPACER (Ref # 92026)	92026-0727	1
SPACER,17.2X23X0.5 (Ref # 92026A)	92026-1037	3
RING-SNAP,17MM (Ref # 92033)	92033-1060	5
RING-O,16.8X1.9 (Ref # 92055)	92055-0151	1
BUSHING (Ref # 92139)	92139-0001	1
BUSHING,12X14X9.4 (Ref # 92139A)	92139-0002	1
BUSHING,17X19X9.5 (Ref # 92139B)	92139-0282	1
BUSHING,14.5X17.25X11.0 (Ref # 92139C)	92139-0283	1
BUSHING (Ref # 92139D)	92139-0286	1
COLLAR,SPROCKET (Ref # 92143)	92143-1680	1

© 2026 Kawasaki Motors Corp., U.S.A.