2020 KLX®140G

PARTS DIAGRAM

Cylinder Head

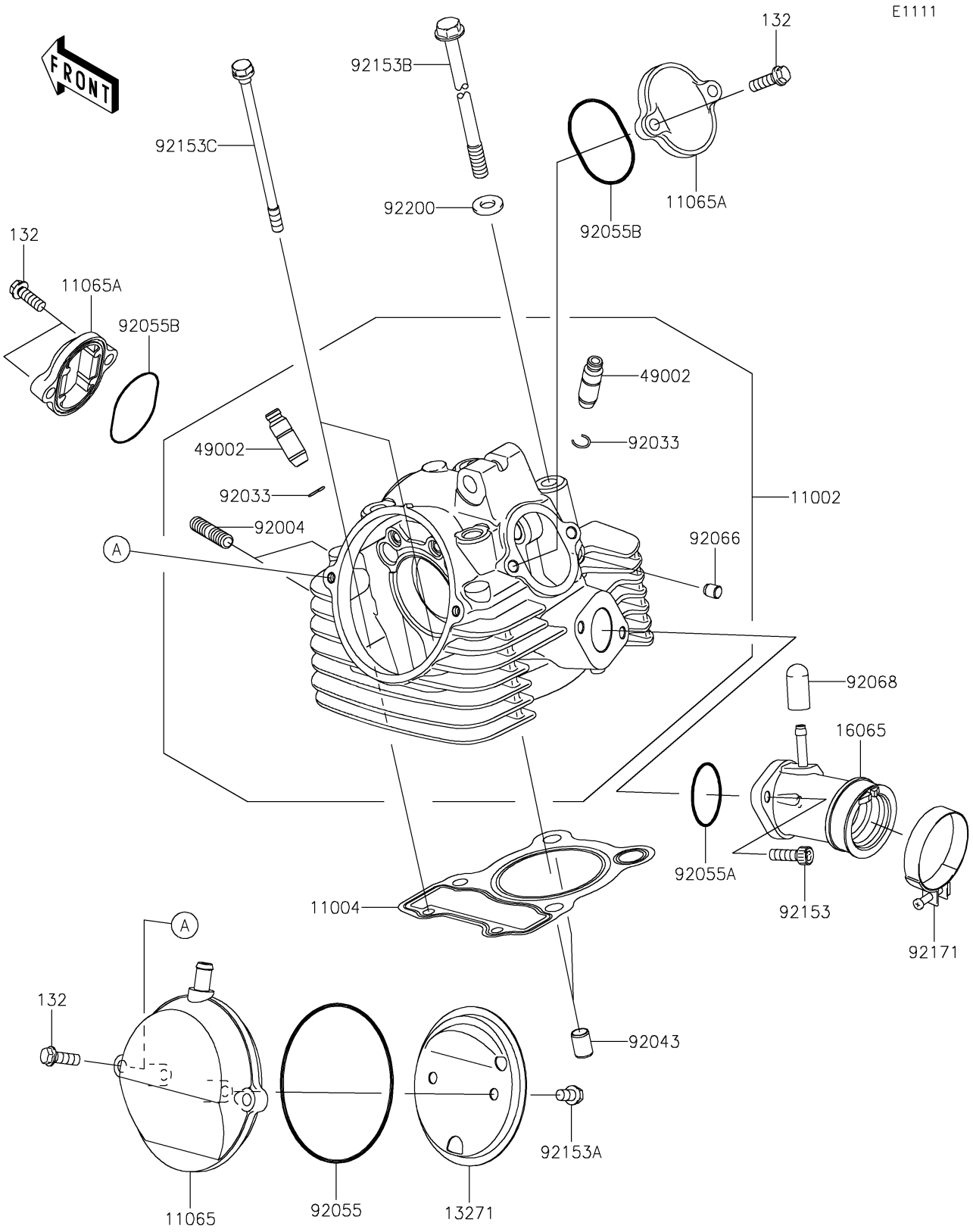

© 2026 Kawasaki Motors Corp., U.S.A.

2020 KLX®140G

PARTS LIST

Cylinder Head

ITEM NAME	PART NUMBER	QUANTITY
HEAD-ASSY-CYLINDER (Ref # 11002)	11002-0061	1
GASKET-HEAD (Ref # 11004)	11004-0065	1
CAP (Ref # 11065)	11065-0212	1
CAP,VALVE ADJUSTING (Ref # 11065A)	11065-0252	2
BOLT-FLANGED-SMALL,6X20 (Ref # 132)	132BA0620	6
PLATE,BREATHER (Ref # 13271)	13271-1844	1
HOLDER-CARBURETOR (Ref # 16065)	16065-0054	1
GUIDE-VALVE (Ref # 49002)	49002-0019	2
STUD,8X22 (Ref # 92004)	92004-1217	2
RING-SNAP (Ref # 92033)	92033-1247	2
PIN,8.2X10X14 (Ref # 92043)	92043-1264	2
RING-O,86X1.9 (Ref # 92055)	92055-0202	1
RING-O,32MM (Ref # 92055A)	92055-1256	1
RING-O,ADJUST CAP (Ref # 92055B)	92055-1655	2
PLUG,OIL LINE,7.2X8 (Ref # 92066)	92066-1012	1
PLUG,12X25 (Ref # 92068)	92068-006	1
BOLT,6X20 (Ref # 92153)	92153-0481	2
BOLT,6X10 (Ref # 92153A)	92153-1140	2
BOLT,8X201 (Ref # 92153B)	92153-1141	4
BOLT,FLANGED,6X110 (Ref # 92153C)	92153-1970	2
CLAMP (Ref # 92171)	92171-0691	1
WASHER,8.2X17X2.3 (Ref # 92200)	92200-1631	4

© 2026 Kawasaki Motors Corp., U.S.A.