2017 KLX®140L

PARTS DIAGRAM

Owner's Tools

F2810

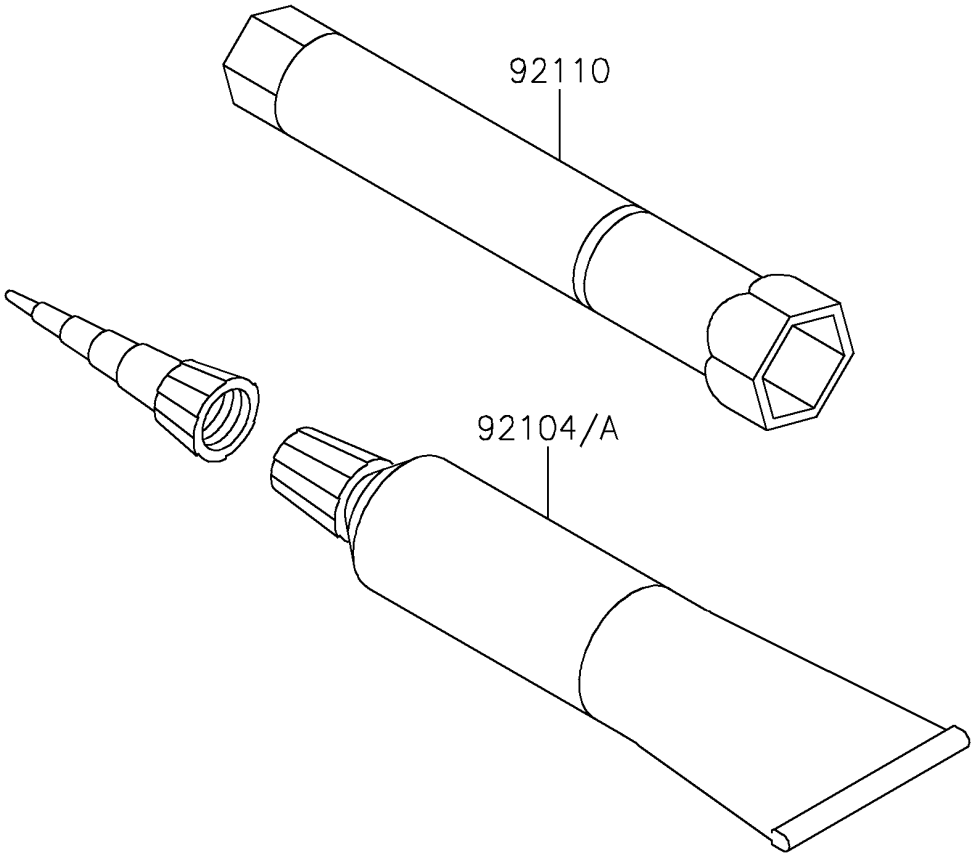

© 2026 Kawasaki Motors Corp., U.S.A.

2017 KLX®140L

PARTS LIST

Owner's Tools

ITEM NAME	PART NUMBER	QUANTITY
GASKET-LIQUID,TB1211F,CLEAR (Ref # 92104)	92104-0004	1
GASKET-LIQUID,TB1216B,BLACK (Ref # 92104A)	92104-1064	1
TOOL-WRENCH,BOX,16MM (Ref # 92110)	92110-1206	1

© 2026 Kawasaki Motors Corp., U.S.A.