2017 KLX®140L

PARTS DIAGRAM

Footrests

F2160

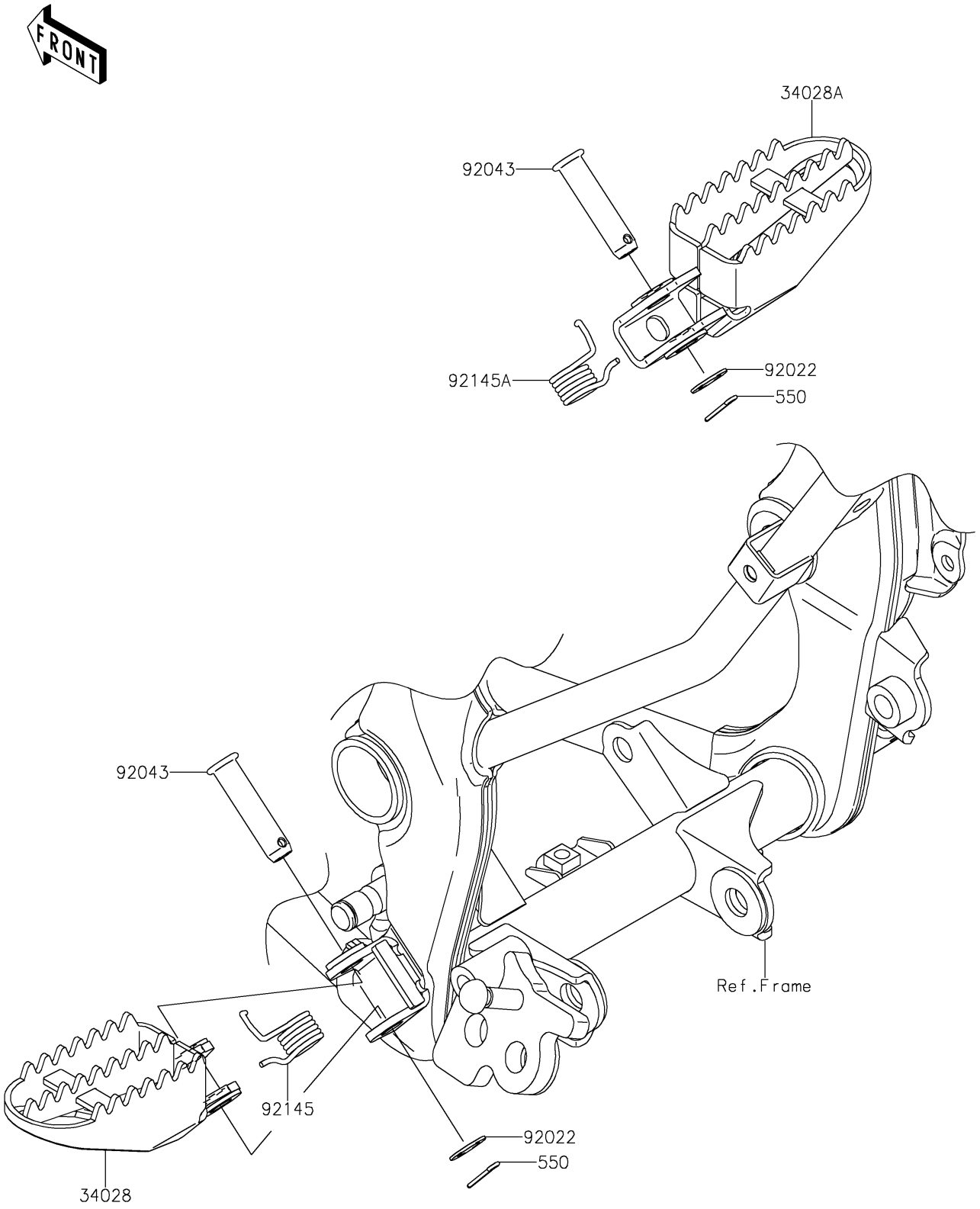

© 2026 Kawasaki Motors Corp., U.S.A.

2017 KLX®140L

PARTS LIST

Footrests

ITEM NAME	PART NUMBER	QUANTITY
STEP,LH,P.SILVER (Ref # 34028)	34028-0077-458	1
STEP,RH,P.SILVER (Ref # 34028A)	34028-0078-458	1
PIN-COTTER,3.0X20 (Ref # 550)	550S3020	2
WASHER,10.2X16X1 (Ref # 92022)	92022-1829	2
PIN,10X37.5 (Ref # 92043)	92043-1643	2
SPRING,STEP,LH (Ref # 92145)	92145-0601	1
SPRING,STEP,RH (Ref # 92145A)	92145-0602	1

© 2026 Kawasaki Motors Corp., U.S.A.