2017 KLX®140L

PARTS DIAGRAM

Swingarm

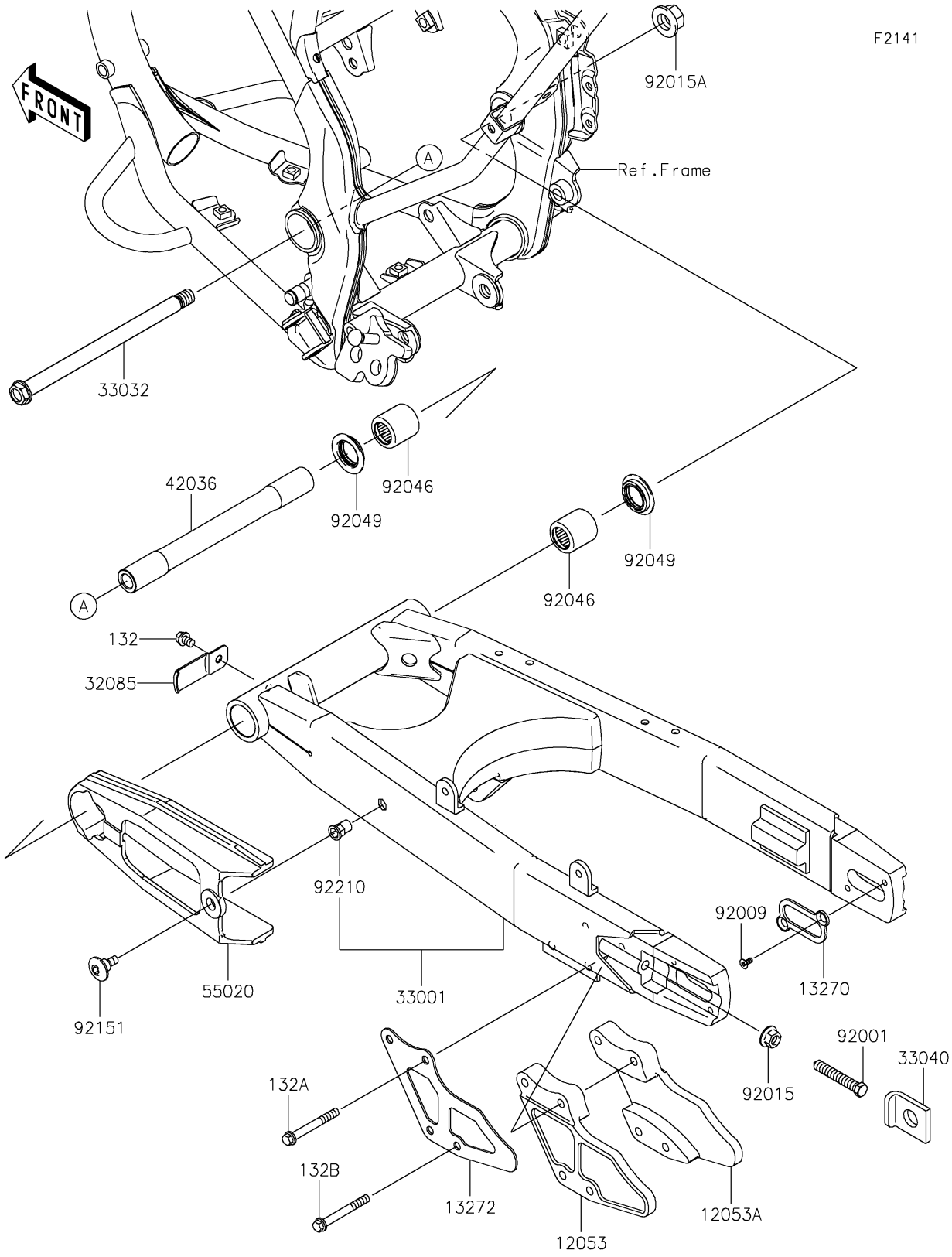

© 2026 Kawasaki Motors Corp., U.S.A.

2017 KLX®140L

PARTS LIST

Swingarm

ITEM NAME	PART NUMBER	QUANTITY
GUIDE-CHAIN (Ref # 12053)	12053-0116	1
GUIDE-CHAIN (Ref # 12053A)	12053-0118	1
BOLT-FLANGED-SMALL,6X8 (Ref # 132)	132BA0608	1
PLATE (Ref # 13270)	13270-1899	2
PLATE,CHAIN GUIDE (Ref # 13272)	13272-0406	1
BOLT-FLANGED-SMALL,6X45 (Ref # 132A)	132BA0645	2
BOLT-FLANGED-SMALL,6X50 (Ref # 132B)	132BA0650	2
STOPPER (Ref # 32085)	32085-0138	1
ARM-COMP-SWING (Ref # 33001)	33001-0123	1
SHAFT-SWING ARM,14X227 (Ref # 33032)	33032-0030	1
ADJUSTER-CHAIN (Ref # 33040)	33040-0032	2
SLEEVE,PIVOT,L=197.8 (Ref # 42036)	42036-0045	1
GUARD,CHAIN (Ref # 55020)	55020-0336	1
BOLT,8X46 (Ref # 92001)	92001-1179	2
SCREW,5X10 (Ref # 92009)	92009-1828	4
NUT,FLANGED,8MM (Ref # 92015)	92015-1014	2
NUT,14MM (Ref # 92015A)	92015-1407	1
BEARING-NEEDLE,BM202726 (Ref # 92046)	92046-1110	2
SEAL-OIL,ARM (Ref # 92049)	92049-1109	2
BOLT,SOCKET,6X18 (Ref # 92151)	92151-1149	1
NUT,POP,6MM,L=15 (Ref # 92210)	92210-1397	1

© 2026 Kawasaki Motors Corp., U.S.A.