2017 KLX®140L

PARTS DIAGRAM

Valve(s)

E1210

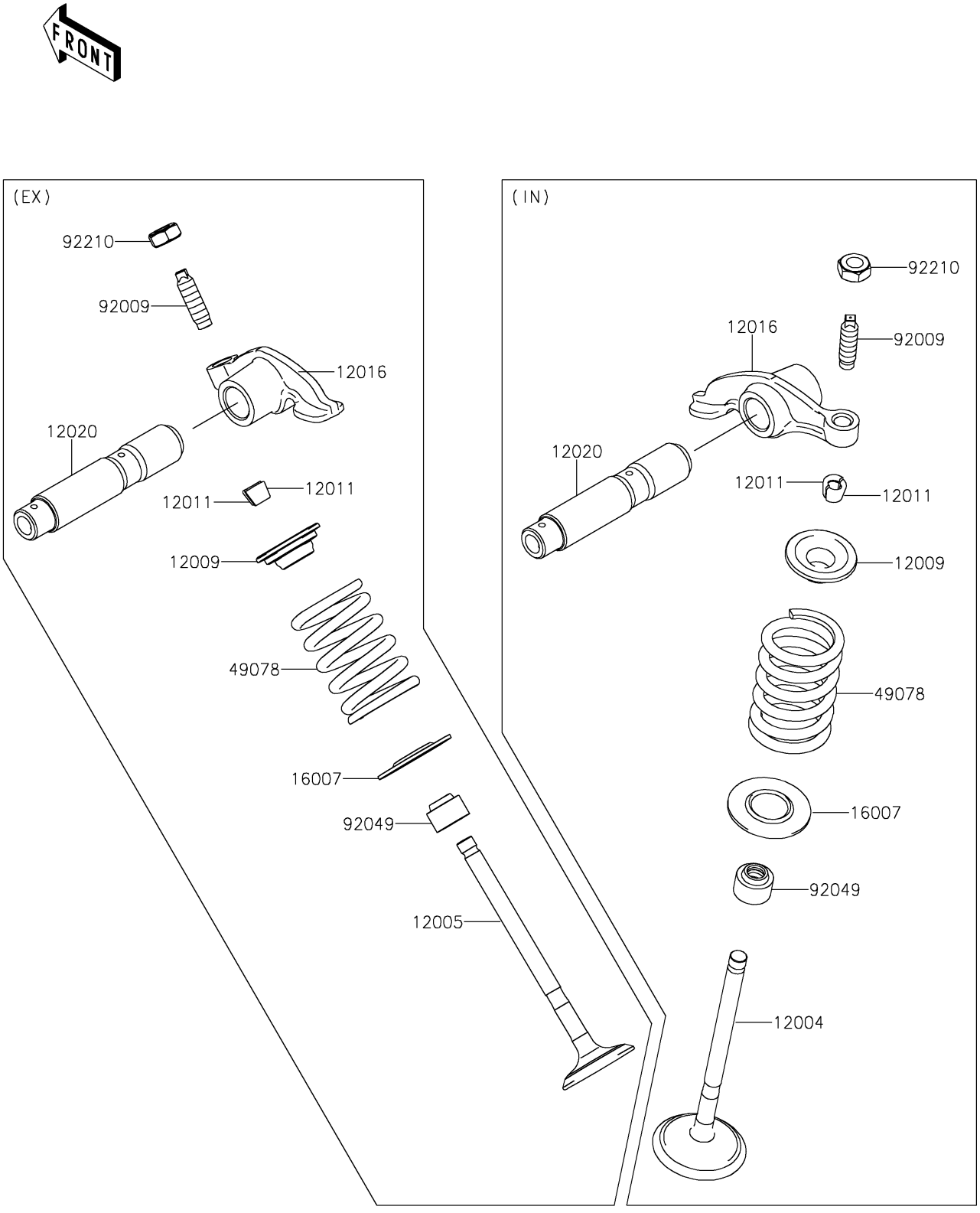

© 2026 Kawasaki Motors Corp., U.S.A.

2017 KLX®140L

PARTS LIST

Valve(s)

ITEM NAME	PART NUMBER	QUANTITY
VALVE-INTAKE (Ref # 12004)	12004-0049	1
VALVE-EXHAUST (Ref # 12005)	12005-0725	1
RETAINER-VALVE SPRING (Ref # 12009)	12009-0018	2
COLLET (Ref # 12011)	12011-1051	4
ARM-ROCKER (Ref # 12016)	12016-0725	2
SHAFT-ROCKER (Ref # 12020)	12020-0007	2
SEAT-SPRING (Ref # 16007)	16007-1223	2
SPRING-ENGINE VALVE (Ref # 49078)	49078-0064	2
SCREW,VALVE ADJUST (Ref # 92009)	92009-1109	2
SEAL-OIL (Ref # 92049)	92049-0139	2
NUT,VALVE ADJUST LOCK (Ref # 92210)	92210-1491	2

© 2026 Kawasaki Motors Corp., U.S.A.