2017 KLX®140L

PARTS DIAGRAM

Cylinder/Piston(s)

E1120

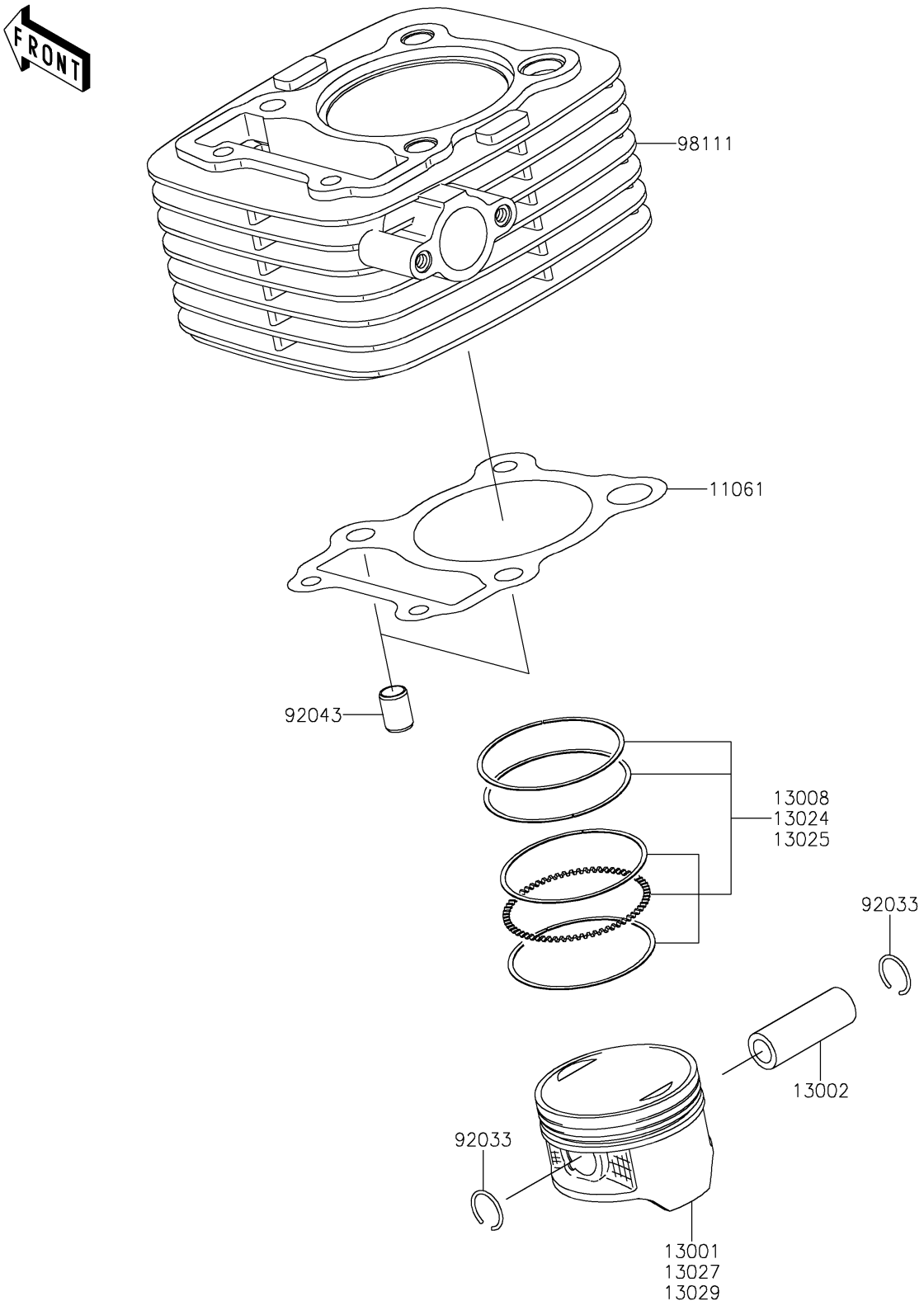

© 2026 Kawasaki Motors Corp., U.S.A.

2017 KLX®140L

PARTS LIST

Cylinder/Piston(s)

ITEM NAME	PART NUMBER	QUANTITY
GASKET,CYLINDER BASE (Ref # 11061)	11061-0319	1
PISTON-ENGINE (Ref # 13001)	13001-0093	1
PIN-PISTON (Ref # 13002)	13002-1126	1
RING-SET-PISTON (Ref # 13008)	13008-0038	1
RING-SET-PISTON LL,O/S 1.00 (Ref # 13024)	13024-0009	1
RING-SET-PISTON L,O/S 0.50 (Ref # 13025)	13025-0011	1
PISTON-ENGINE LL,O/S 1.00 (Ref # 13027)	13027-0013	1
PISTON-ENGINE L,O/S 0.50 (Ref # 13029)	13029-0018	1
RING-SNAP (Ref # 92033)	92033-1287	2
PIN,8.2X10X14 (Ref # 92043)	92043-1264	2
CYLINDER-COMP-ENGINE (Ref # 98111)	98111-0024	1

© 2026 Kawasaki Motors Corp., U.S.A.