2015 KX™100

PARTS DIAGRAM

Rear Hub

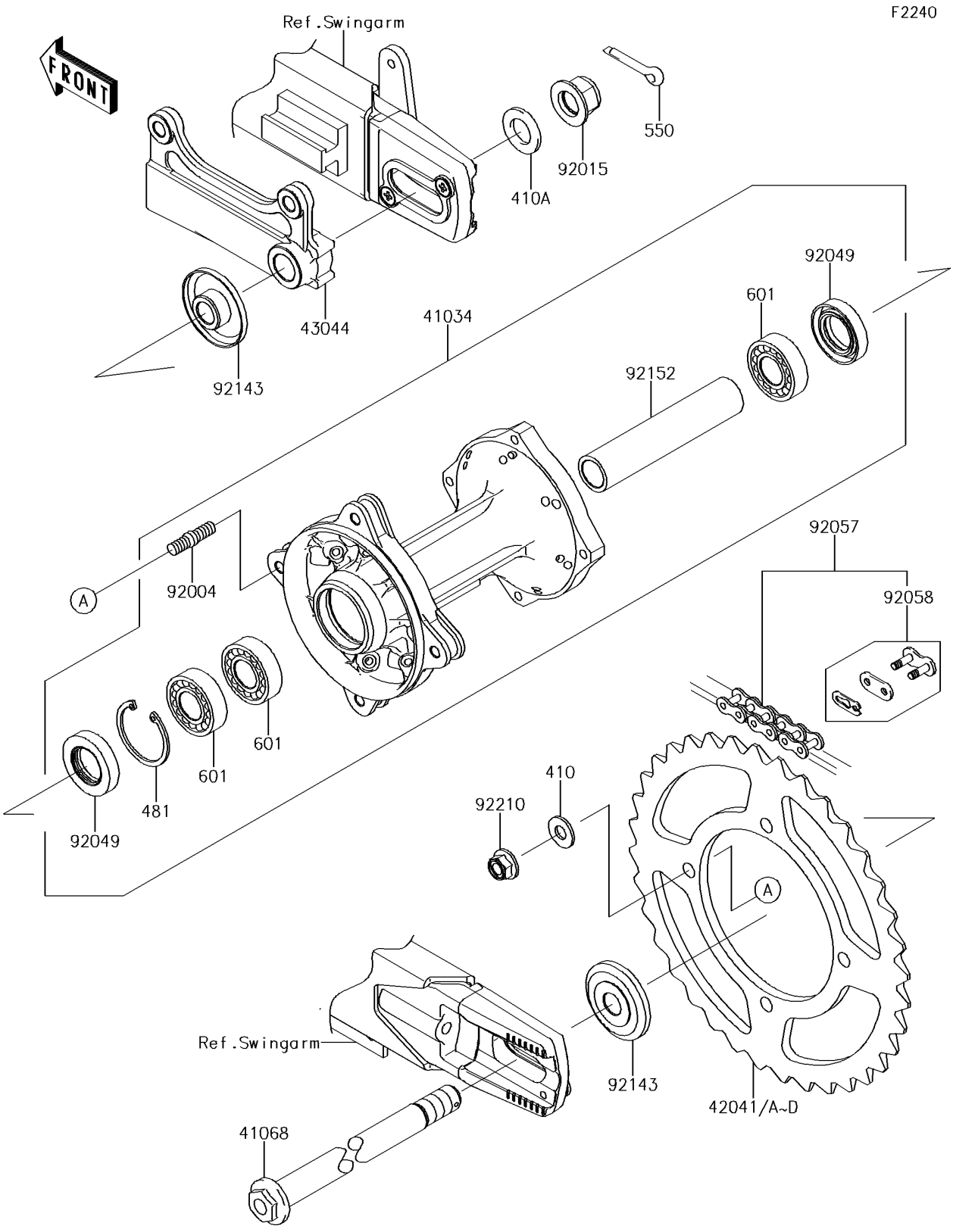

© 2026 Kawasaki Motors Corp., U.S.A.

2015 KX™100

PARTS LIST

Rear Hub

ITEM NAME	PART NUMBER	QUANTITY
WASHER-PLAIN-SMALL,8MM (Ref # 410)	410AA0800	4
DRUM-ASSY,REAR BRAKE (Ref # 41034)	41034-0570	1
AXLE,RR (Ref # 41068)	41068-1401	1
WASHER-PLAIN-SMALL,14MM (Ref # 410A)	410AA1400	1
SPROCKET-HUB,49T (Ref # 42041)	42041-1207	1
SPROCKET-HUB,50T (Ref # 42041A)	42041-1228	1
SPROCKET-HUB,51T (Ref # 42041B)	42041-1229	1
SPROCKET-HUB,52T (Ref # 42041C)	42041-1245	1
SPROCKET-HUB,53T (Ref # 42041D)	42041-1246	1
HOLDER-COMP-CALIPER (Ref # 43044)	43044-1122	1
CIRCLIP-TYPE-C,35MM (Ref # 481)	481J3500	1
PIN-COTTER,2.5X20 (Ref # 550)	550AA2520	1
BEARING-BALL (Ref # 601)	601B6202UU	3
STUD,8X16 (Ref # 92004)	92004-0730	4
NUT,FLANGED,14MM (Ref # 92015)	92015-1401	1
SEAL-OIL (Ref # 92049)	92049-1469	2
CHAIN,DRIVE,DID420DS2X124L (Ref # 92057)	92057-1497	1
JOINT-CHAIN,DRIVE (Ref # 92058)	92058-1086	1
COLLAR,RR AXLE,L=12.5 (Ref # 92143)	92143-1938	2
COLLAR,RR BRAKE DRUM,L=95 (Ref # 92152)	92152-1090	1
NUT,FLANGED,LOCK,8MM (Ref # 92210)	92210-0493	4

© 2026 Kawasaki Motors Corp., U.S.A.