2008 KLX®140

PARTS DIAGRAM

Generator

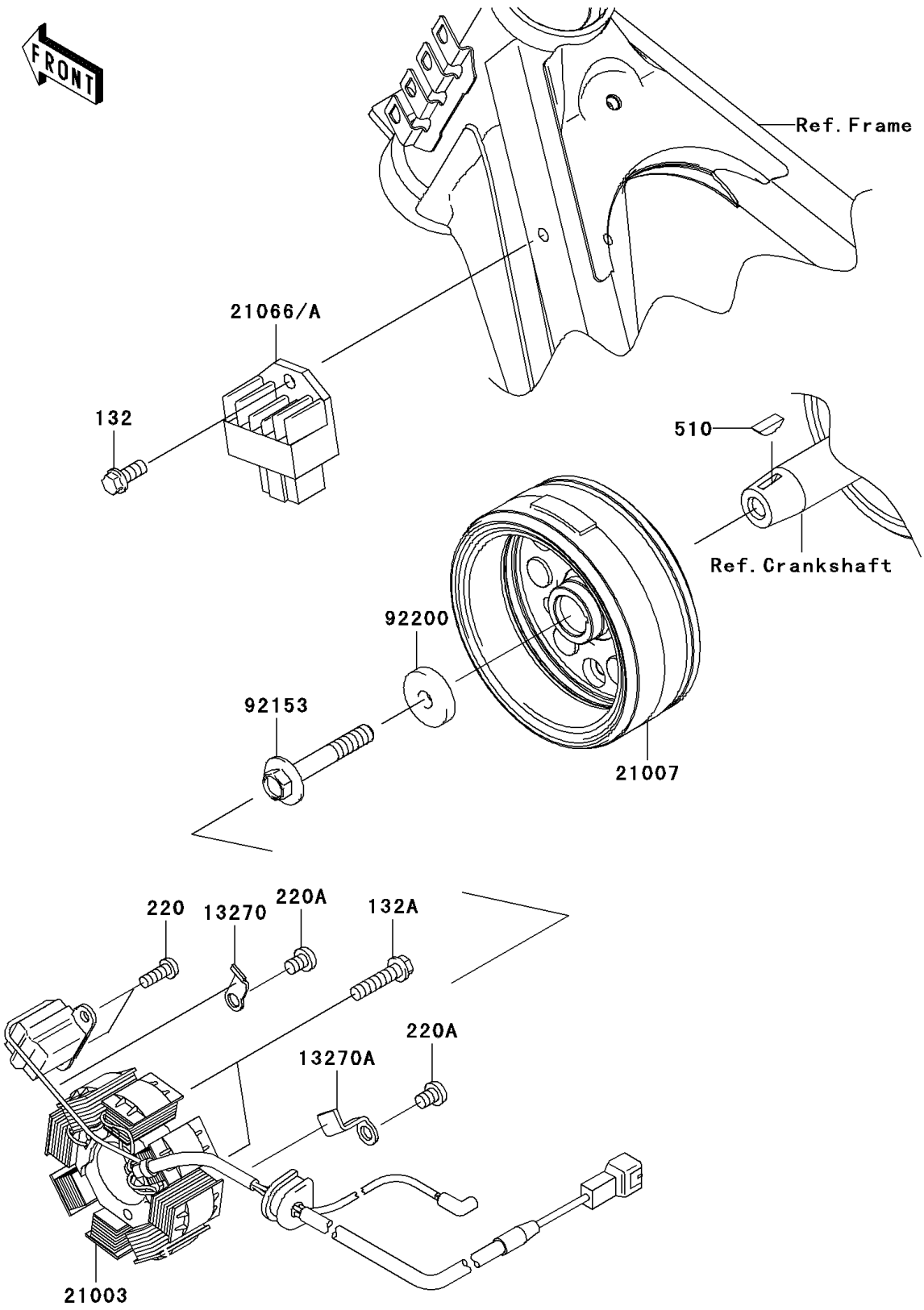

© 2026 Kawasaki Motors Corp., U.S.A.

2008 KLX®140

PARTS LIST

Generator

ITEM NAME	PART NUMBER	QUANTITY
BOLT-FLANGED-SMALL,6X14 (Ref # 132)	132BA0614	1
BOLT-FLANGED-SMALL,6X25 (Ref # 132A)	132BA0625	2
SCREW-PAN-CROS,5X14 (Ref # 220)	220AA0514	2
SCREW-PAN-CROS,6X8 (Ref # 220A)	220AA0608	2
KEY-WOODRUFF (Ref # 510)	510A3200	1
PLATE (Ref # 13270)	13270-1754	1
PLATE (Ref # 13270A)	13270-1961	1
STATOR (Ref # 21003)	21003-0066	1
ROTOR (Ref # 21007)	21007-0105	1
REGULATOR-VOLTAGE (Ref # 21066)	21066-0029	1
BOLT,8X50 (Ref # 92153)	92153-1135	1
WASHER,8.2X26X5 (Ref # 92200)	92200-1626	1

© 2026 Kawasaki Motors Corp., U.S.A.