2019 MULE PRO-DXT™ EPS LE

PARTS DIAGRAM

Valve(s)/Camshaft(s)

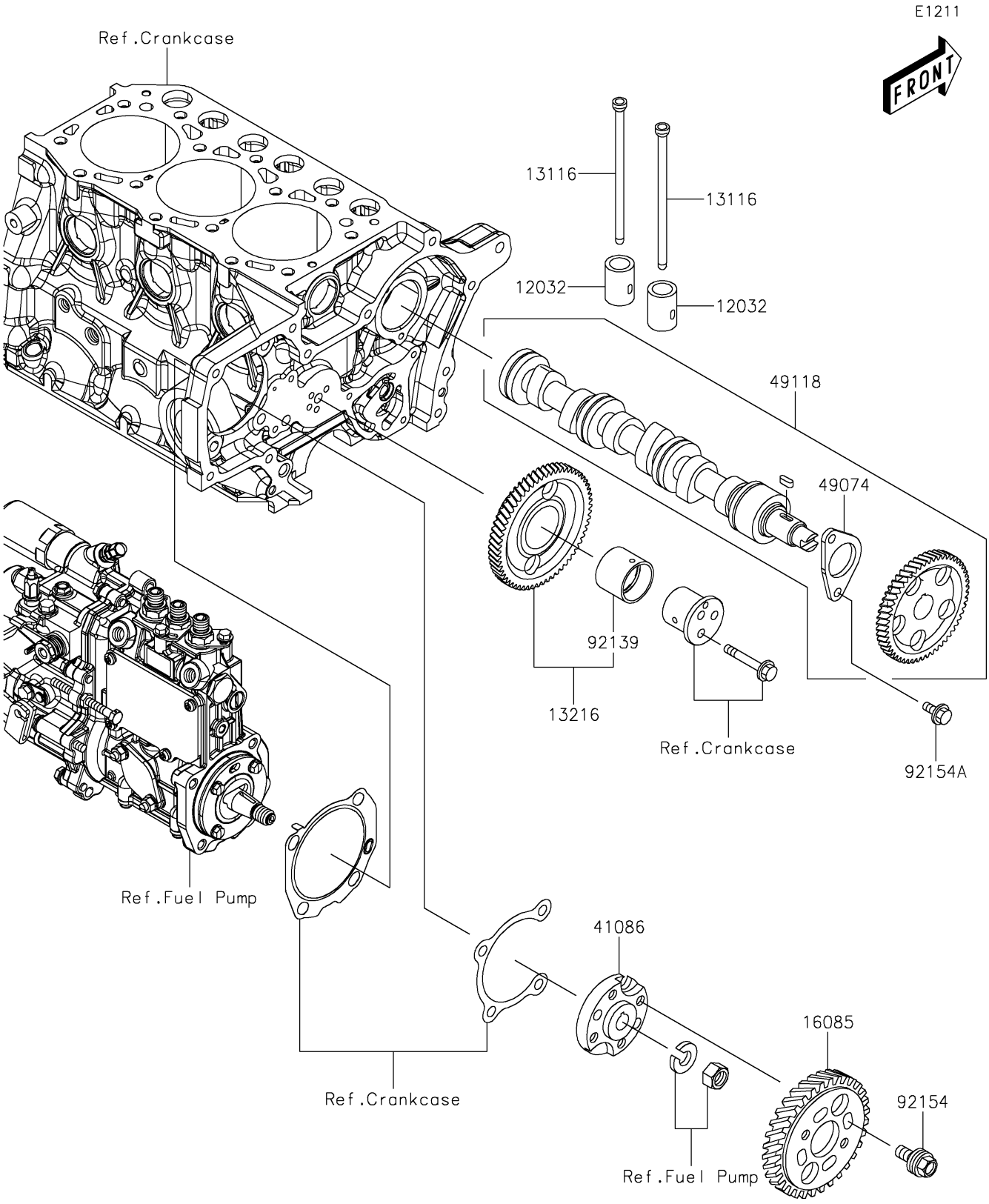

© 2026 Kawasaki Motors Corp., U.S.A.

2019 MULE PRO-DXT™ EPS LE

PARTS LIST

Valve(s)/Camshaft(s)

ITEM NAME	PART NUMBER	QUANTITY
TAPPET (Ref # 12032)	12032-0021	6
ROD-PUSH (Ref # 13116)	13116-0726	6
GEAR-COMP,IDLE (Ref # 13216)	13216-0889	1
GEAR,PUMP (Ref # 16085)	16085-0648	1
FLANGE (Ref # 41086)	41086-0723	1
PLATE-THRUST (Ref # 49074)	49074-0004	1
CAMSHAFT-COMP (Ref # 49118)	49118-0864	1
BUSHING,IDLE GEAR (Ref # 92139)	92139-0863	1
BOLT (Ref # 92154)	92154-1996	4
BOLT,FLANGED,6X12 (Ref # 92154A)	92154-1998	2

© 2026 Kawasaki Motors Corp., U.S.A.