2016 CONCOURS®14 ABS

PARTS DIAGRAM

Fuel Tank

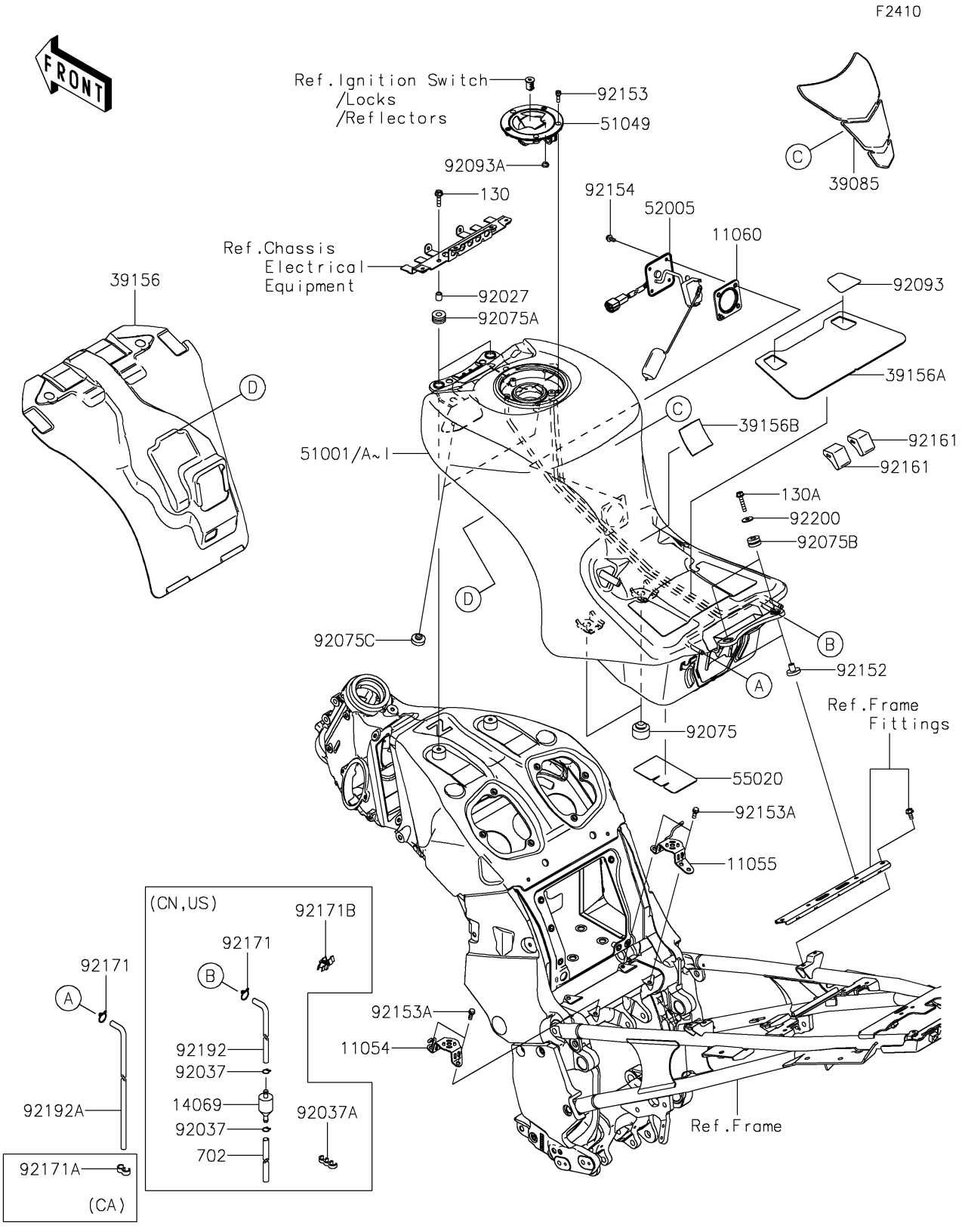

© 2026 Kawasaki Motors Corp., U.S.A.

2016 CONCOURS®14 ABS

PARTS LIST

Fuel Tank

ITEM NAME	PART NUMBER	QUANTITY
BRACKET,FUEL TANK,CNT,LH (Ref # 11054)	11054-0681	1
BRACKET,FUEL TANK,CNT,RH (Ref # 11055)	11055-0348	1
GASKET,FUEL GAUGE (Ref # 11060)	11060-1952	1
BREATHER (Ref # 14069)	14069-0703	1
PAD-TANK (Ref # 39085)	39085-0011	1
PAD (Ref # 39156)	39156-0794	1
PAD,FUEL TANK (Ref # 39156A)	39156-0863	1
PAD,50X50X3 (Ref # 39156B)	39156-1878	1
TANK-COMP-FUEL,M.M.GRAY (Ref # 51001A)	51001-0818-25X	1
TANK-COMP-FUEL,M.S.BLACK (Ref # 51001D)	51001-0818-660	1
TANK-COMP-FUEL,M.M.GRAY (Ref # 51001F)	51001-0819-25X	1
TANK-COMP-FUEL,M.S.BLACK (Ref # 51001I)	51001-0819-660	1
CAP-TANK,FUEL (Ref # 51049)	51049-0039	1
GAUGE,FUEL (Ref # 52005)	52005-0026	1
GUARD,FUEL TANK (Ref # 55020)	55020-0551	1
COLLAR,6.8X10X12 (Ref # 92027)	92027-162	2
CLAMP,TUBE (Ref # 92037)	92037-147	2
CLAMP,TUBE (Ref # 92037A)	92037-1941	1
DAMPER (Ref # 92075)	92075-015	2
DAMPER,10X24X12 (Ref # 92075A)	92075-1690	2
DAMPER (Ref # 92075B)	92075-209	2
BOLT-FLANGED,6X25 (Ref # 130)	130BA0625	2
BOLT-FLANGED,6X30 (Ref # 130A)	130BA0630	2
TUBE-RUBBER,7X10X200 (Ref # 702)	702A07200	1
DAMPER,9X24X14 (Ref # 92075C)	92075-281	2
SEAL (Ref # 92093)	92093-0583	2
SEAL,FUEL TANK CAP (Ref # 92093A)	92093-1030	1
COLLAR (Ref # 92152)	92152-0364	2
BOLT,SOCKET,5X16 (Ref # 92153)	92153-1616	3

© 2026 Kawasaki Motors Corp., U.S.A.

2016 CONCOURS®14 ABS

PARTS LIST

Fuel Tank

ITEM NAME	PART NUMBER	QUANTITY
BOLT,FLANGED,6X20 (Ref # 92153A)	92153-1694	4
BOLT,FLANGED,5X12 (Ref # 92154)	92154-1856	4
DAMPER (Ref # 92161)	92161-1481	2
CLAMP (Ref # 92171)	92171-0573	1
CLAMP (Ref # 92171A)	92171-1184	1
CLAMP (Ref # 92171B)	92171-1708	1
TUBE (Ref # 92192)	92192-0611	1
TUBE,DRAIN (Ref # 92192A)	92192-0693	1
WASHER,6.5X20X1.6 (Ref # 92200)	92200-0283	2
CLAMP (Ref # 92171)	92171-0573	2

© 2026 Kawasaki Motors Corp., U.S.A.