# 2018 NINJA® 650

## PARTS DIAGRAM

### Front Brake

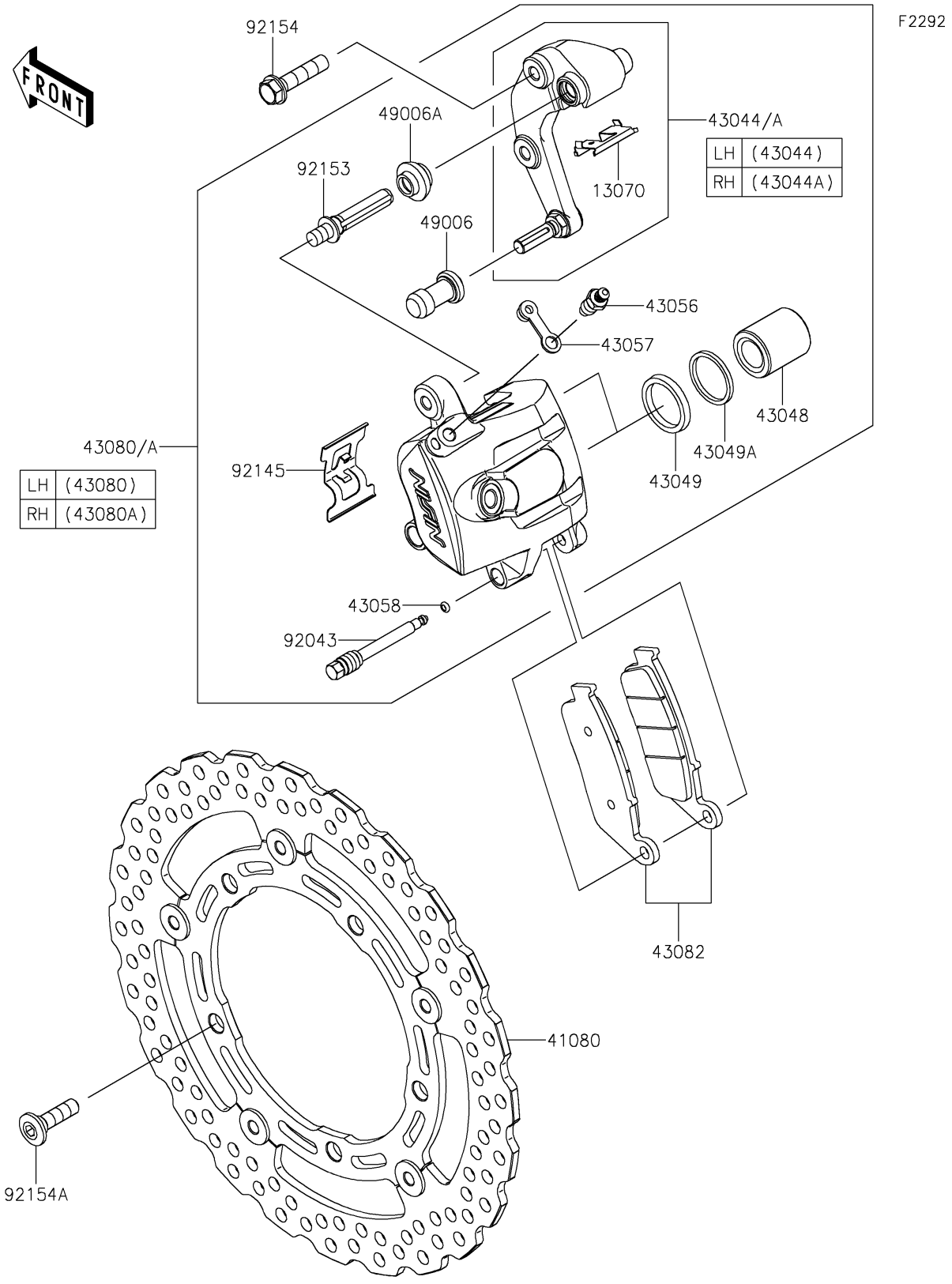


© 2026 Kawasaki Motors Corp., U.S.A.

# 2018 NINJA® 650

## PARTS LIST

### Front Brake

| ITEM NAME | PART NUMBER | QUANTITY |
|---|---|---|
| GUIDE,BRAKE PAD (Ref # 13070) | 13070-0077 | 2 |
| DISC,BLACK+SIL (Ref # 41080) | 41080-0666-11I | 2 |
| HOLDER-COMP-CALIPER,FR,LH (Ref # 43044) | 43044-0078 | 1 |
| HOLDER-COMP-CALIPER,FR,RH (Ref # 43044A) | 43044-0079 | 1 |
| PISTON-CALIPER (Ref # 43048) | 43048-1068 | 4 |
| PACKING,PISTON SEAL (Ref # 43049) | 43049-1060 | 4 |
| PACKING,PISTON SEAL (Ref # 43049A) | 43049-1061 | 4 |
| BREATHER (Ref # 43056) | 43056-1055 | 2 |
| CAP-BREATHER (Ref # 43057) | 43057-1001 | 2 |
| RING,STOPPER (Ref # 43058) | 43058-1100 | 2 |
| CALIPER-SUB-ASSY,FR,LH,BLACK (Ref # 43080) | 43080-0177-DJ | 1 |
| CALIPER-SUB-ASSY,FR,RH,BLACK (Ref # 43080A) | 43080-0178-DJ | 1 |
| PAD-ASSY-BRAKE (Ref # 43082) | 43082-0165 | 2 |
| BOOT,CALIPER (Ref # 49006) | 49006-1088 | 2 |
| BOOT,CALIPER (Ref # 49006A) | 49006-1242 | 2 |
| PIN,HANGER (Ref # 92043) | 92043-0820 | 2 |
| SPRING,PAD (Ref # 92145) | 92145-0524 | 2 |
| BOLT (Ref # 92153) | 92153-1872 | 2 |
| BOLT,FLANGED,8X35 (Ref # 92154) | 92154-1646 | 4 |
| BOLT,SOCKET,8X30 (Ref # 92154A) | 92154-1865 | 10 |

© 2026 Kawasaki Motors Corp., U.S.A.