2017 Ninja 650

PARTS DIAGRAM

Balancer

E1323



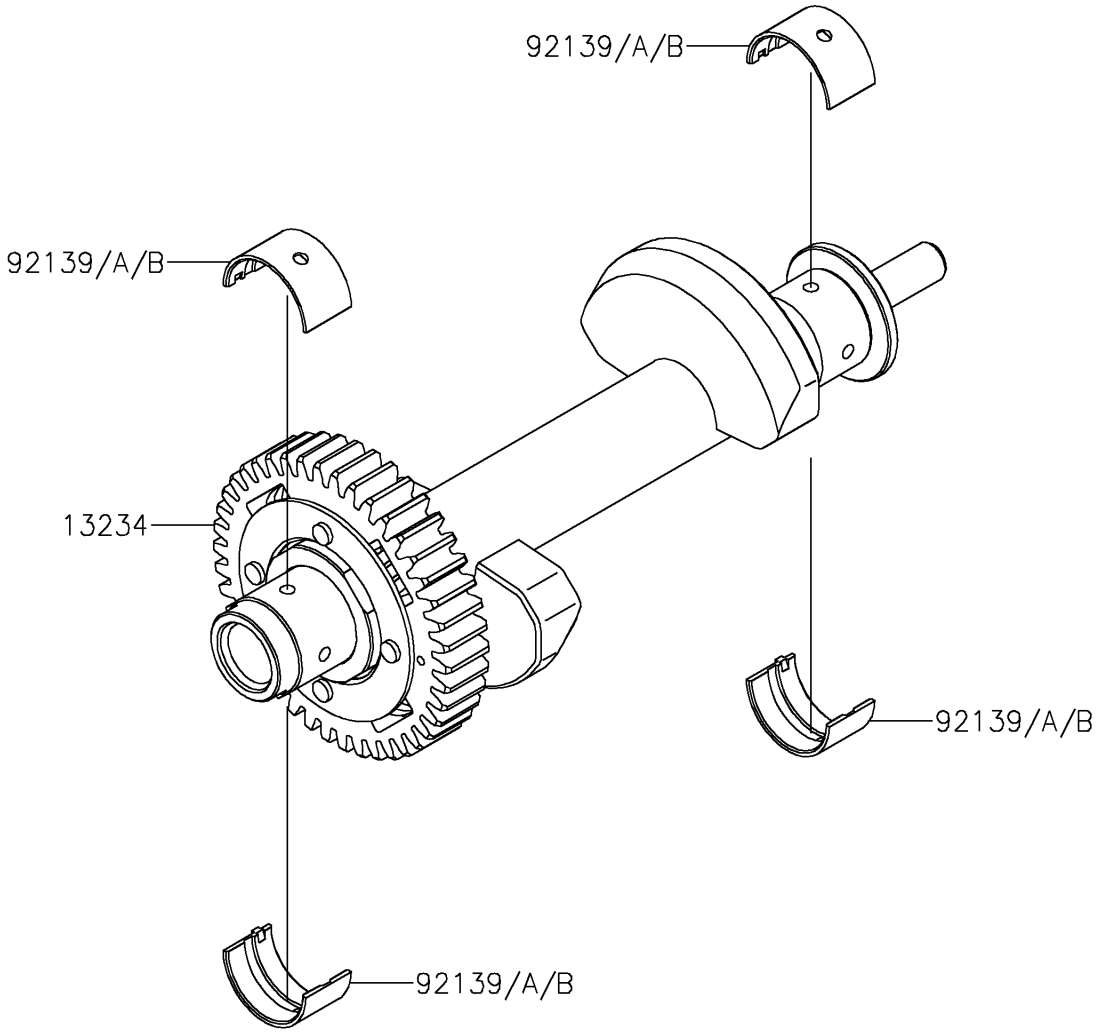

© 2026 Kawasaki Motors Corp., U.S.A.

2017 Ninja 650

PARTS LIST

Balancer

ITEM NAME	PART NUMBER	QUANTITY
SHAFT-COMP,BALANCER (Ref # 13234)	13234-0043	1
BUSHING,BALANCER,BLUE (Ref # 92139)	92139-0117	4
BUSHING,BALANCER,BLACK (Ref # 92139A)	92139-0118	AR
BUSHING,BALANCER,BROWN (Ref # 92139B)	92139-0119	AR

© 2026 Kawasaki Motors Corp., U.S.A.