2018 Z650 ABS

PARTS DIAGRAM

Radiator

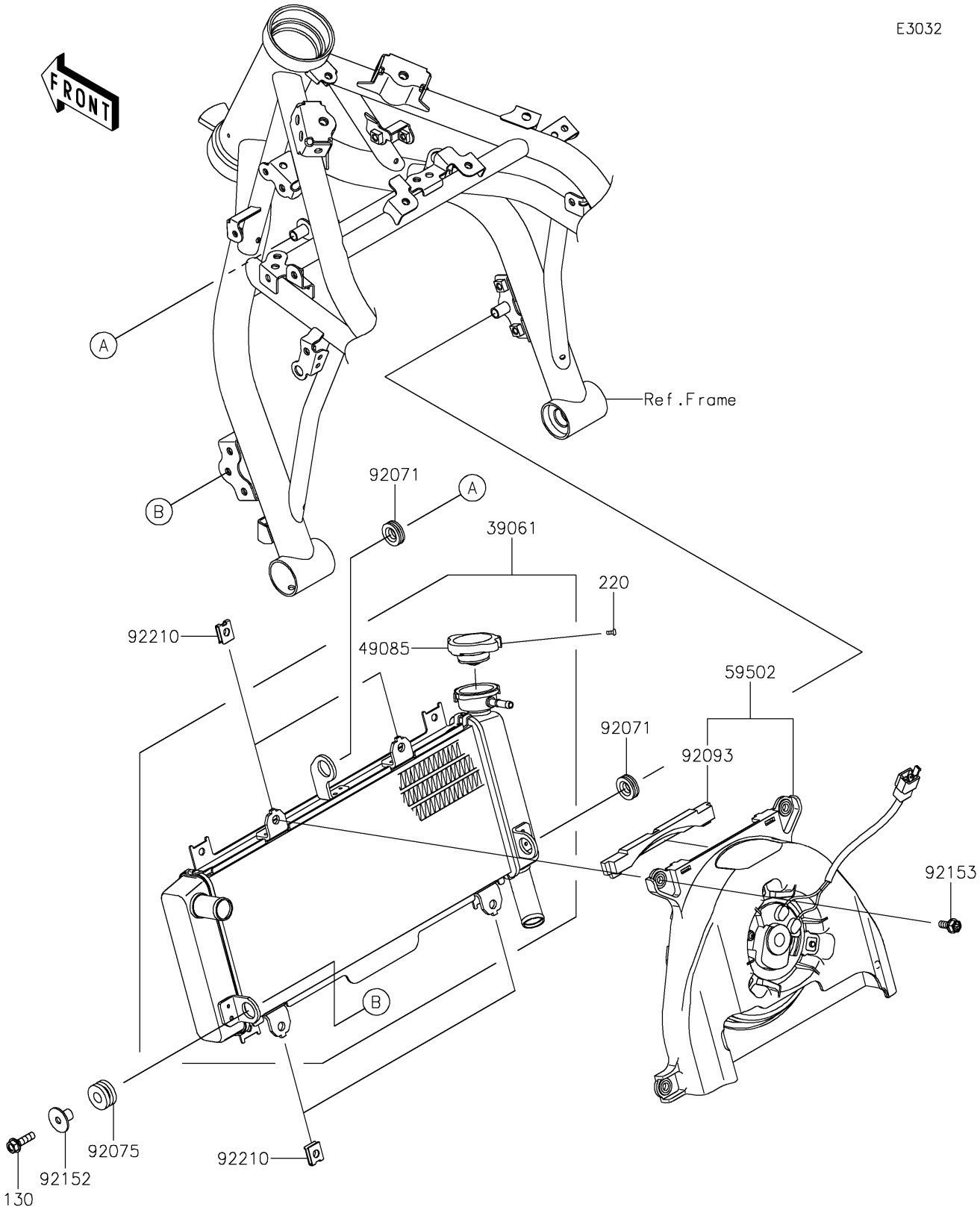

© 2026 Kawasaki Motors Corp., U.S.A.

2018 Z650 ABS

PARTS LIST

Radiator

ITEM NAME	PART NUMBER	QUANTITY
BOLT-FLANGED,6X22 (Ref # 130)	130BB0622	1
SCREW-PAN-CROS,3X6 (Ref # 220)	220AB0306	1
RADIATOR-ASSY (Ref # 39061)	39061-0724	1
CAP-ASSY-PRESSURE (Ref # 49085)	49085-0013	1
FAN-ASSY (Ref # 59502)	59502-0608	1
GROMMET (Ref # 92071)	92071-1115	2
DAMPER,10X24X12 (Ref # 92075)	92075-1690	1
SEAL (Ref # 92093)	92093-0695	1
COLLAR (Ref # 92152)	92152-2324	1
BOLT (Ref # 92153)	92153-0531	4
NUT (Ref # 92210)	92210-1323	4

© 2026 Kawasaki Motors Corp., U.S.A.