2010 Prairie 360 4X4 Realtree APG HD

Kawasaki
Let the Good Times Roll®

PARTS DIAGRAM

Muffler(s)

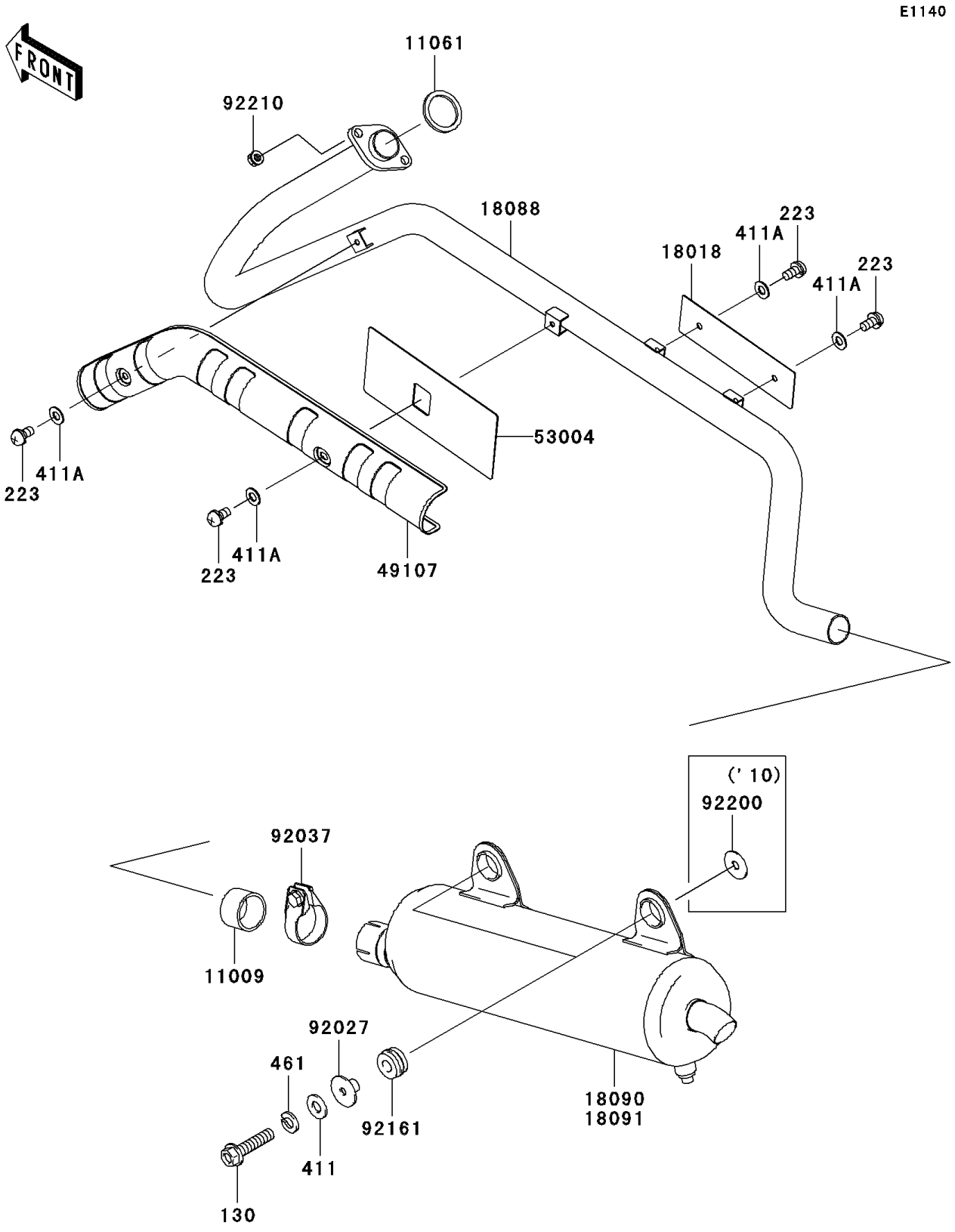

© 2026 Kawasaki Motors Corp., U.S.A.

2010 Prairie 360 4X4 Realtree APG HD

Kawasaki
Let the Good Times Roll®

PARTS LIST

Muffler(s)

ITEM NAME	PART NUMBER	QUANTITY
BOLT-FLANGED,8X35 (Ref # 130)	130CD0835	2
SCREW-PAN-WS-CROS,6X12 (Ref # 223)	223AB0612	4
WASHER-PLAIN (Ref # 411)	411AA0800	2
WASHER-PLAIN,6.5X13X1 (Ref # 411A)	411AB0600	4
WASHER-SPRING,8MM (Ref # 461)	461DA0800	2
GASKET,EXHAUST PIPE CONNECTING (Ref # 11009)	11009-1667	1
GASKET,EXHAUST (Ref # 11061)	11061-1053	1
PLATE-HEAT GUARD,EXHAUST PIPE (Ref # 18018)	18018-1135	1
PIPE-EXHAUST (Ref # 18088)	18088-1215	1
BODY-COMP-MUFFLER (Ref # 18091)	18091-0659	1
COVER-EXHAUST PIPE (Ref # 49107)	49107-1222	1
MAT (Ref # 53004)	53004-1181	1
COLLAR,MUFFLER (Ref # 92027)	92027-1981	2
CLAMP,42MM (Ref # 92037)	92037-1349	1
DAMPER,MUFFLER (Ref # 92161)	92161-1292	2
WASHER (Ref # 92200)	92200-0547	1
NUT,8MM (Ref # 92210)	92210-1242	2

© 2026 Kawasaki Motors Corp., U.S.A.