2004 Prairie 360

PARTS DIAGRAM

Drive Converter

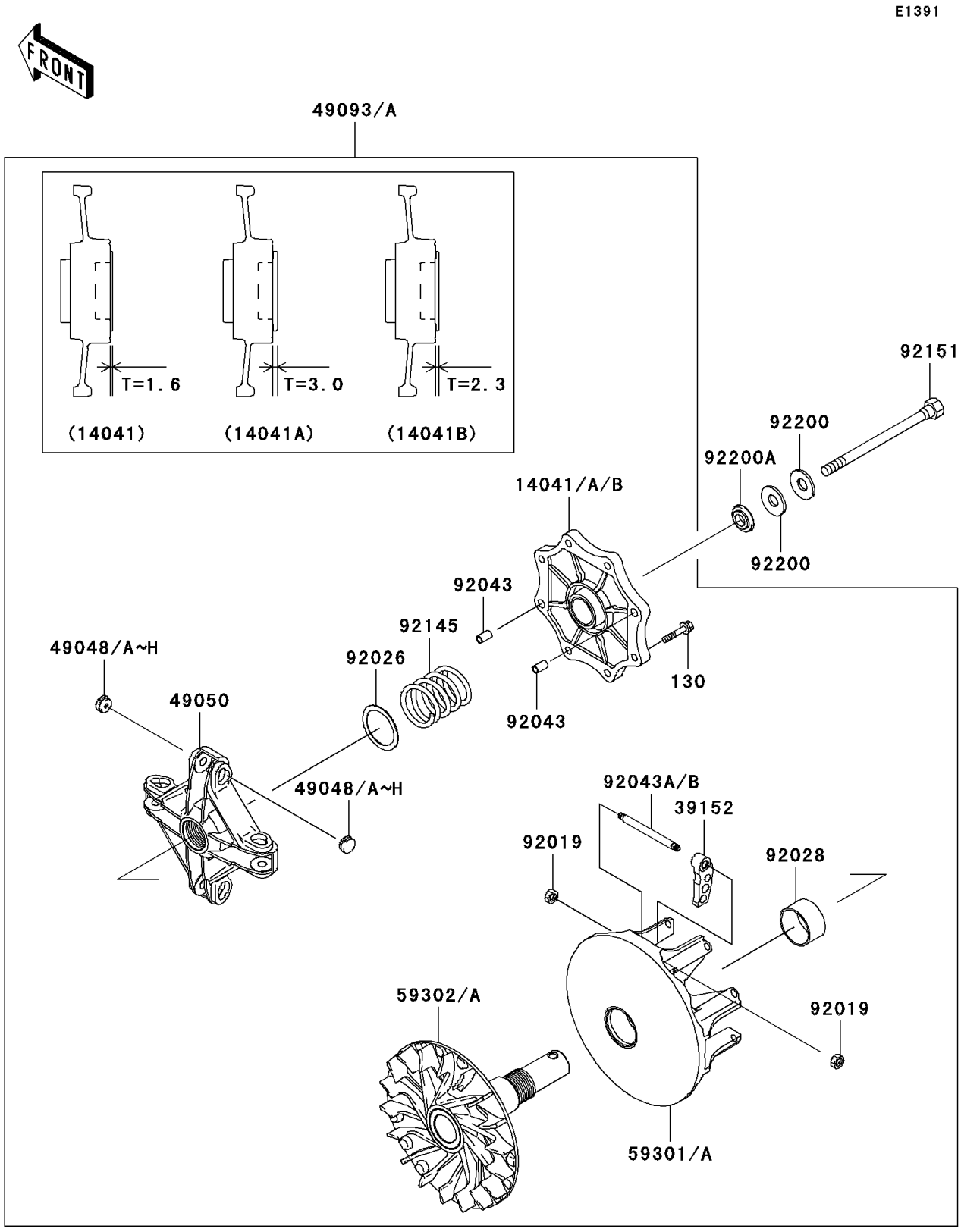

© 2026 Kawasaki Motors Corp., U.S.A.

2004 Prairie 360

PARTS LIST

Drive Converter

ITEM NAME	PART NUMBER	QUANTITY
BOLT-FLANGED (Ref # 130)	130T0630	8
COVER-COMP,RED (Ref # 14041)	14041-1159	AR
COVER-COMP,BLUE (Ref # 14041A)	14041-1160	AR
COVER-COMP,STD (Ref # 14041B)	14041-1161	AR
WEIGHT-RAMP (Ref # 39152)	39152-1096	4
SHOE,T=7.2 (Ref # 49048)	49048-1087	AR
SHOE,T=7.3 (Ref # 49048A)	49048-1088	AR
SHOE,T=7.4 (Ref # 49048B)	49048-1089	AR
SHOE,T=7.5 (Ref # 49048C)	49048-1090	AR
SHOE,T=7.6 (Ref # 49048D)	49048-1091	AR
SHOE,T=7.7 (Ref # 49048E)	49048-1092	AR
SHOE,T=7.8 (Ref # 49048F)	49048-1093	AR
SHOE,T=7.9 (Ref # 49048G)	49048-1094	AR
SHOE,T=8.0 (Ref # 49048H)	49048-1095	AR
SPIDER (Ref # 49050)	49050-1081	1
CONVERTER-ASSY-DRIVE (Ref # 49093A)	49093-1075	1
SHEAVE-MOVABLE (Ref # 59301A)	59301-1070	1
SHEAVE-COMP (Ref # 59302A)	59302-1106	1
NUT,LOCK,6MM (Ref # 92019)	92019-008	8
SPACER,39X49.5X1.0 (Ref # 92026)	92026-1603	1
BUSHING (Ref # 92028)	92028-1975	1
PIN,6.2X8X14 (Ref # 92043)	92043-1263	2
PIN (Ref # 92043B)	92043-1688	4
SPRING (Ref # 92145)	92145-1465	1
BOLT (Ref # 92151)	92151-1393	1
WASHER,SPRING (Ref # 92200)	92200-1504	2
WASHER (Ref # 92200A)	92200-1634	1

© 2026 Kawasaki Motors Corp., U.S.A.