2004 Prairie 360 4X4

PARTS DIAGRAM

Decals(Red)(A2)

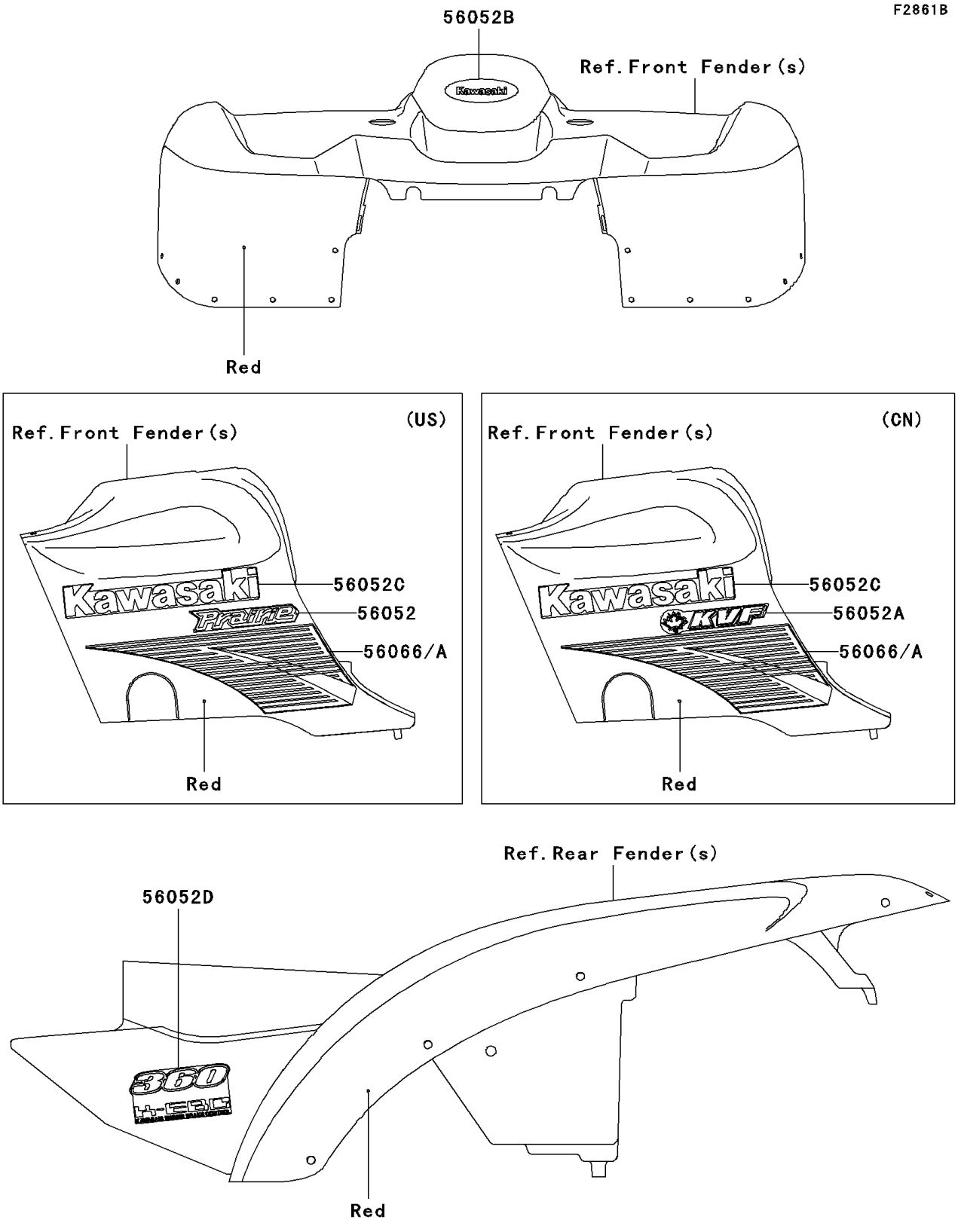

© 2026 Kawasaki Motors Corp., U.S.A.

2004 Prairie 360 4X4

PARTS LIST

Decals(Red)(A2)

ITEM NAME	PART NUMBER	QUANTITY
MARK,FR FENDER,KAWASAKI (Ref # 56052B)	56052-1504	1
MARK,KAWASAKI (Ref # 56052C)	56052-1729	2
MARK,RR FENDER,360 K-EBC (Ref # 56052D)	56052-1730	2
PATTERN,FUEL TANK COVER,LH (Ref # 56066)	56066-0292	1
PATTERN,FUEL TANK COVER,RH (Ref # 56066A)	56066-0293	1
MARK,FR FENDER,PRAIRIE (Ref # 56052)	56052-0116	2
MARK,FUEL TANK COVER,KVF (Ref # 56052A)	56052-0189	2

© 2026 Kawasaki Motors Corp., U.S.A.