2004 Prairie 360 4X4

PARTS DIAGRAM

Side Covers

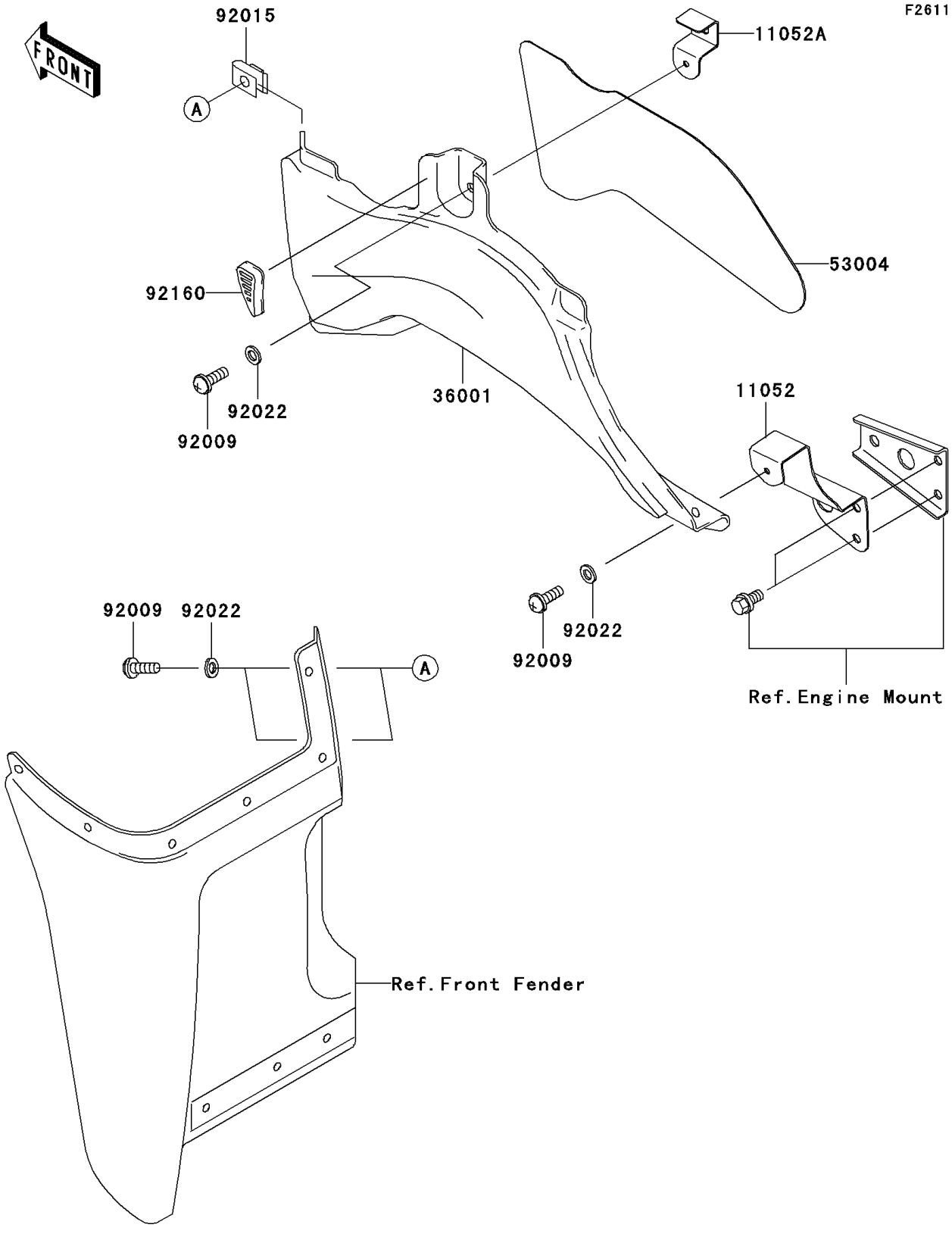

© 2026 Kawasaki Motors Corp., U.S.A.

2004 Prairie 360 4X4

PARTS LIST

Side Covers

ITEM NAME	PART NUMBER	QUANTITY

© 2026 Kawasaki Motors Corp., U.S.A.