2019 JET SKI® Ultra® 310X SE

Kawasaki
Let the Good Times Roll®

PARTS DIAGRAM

Electrical Equipment

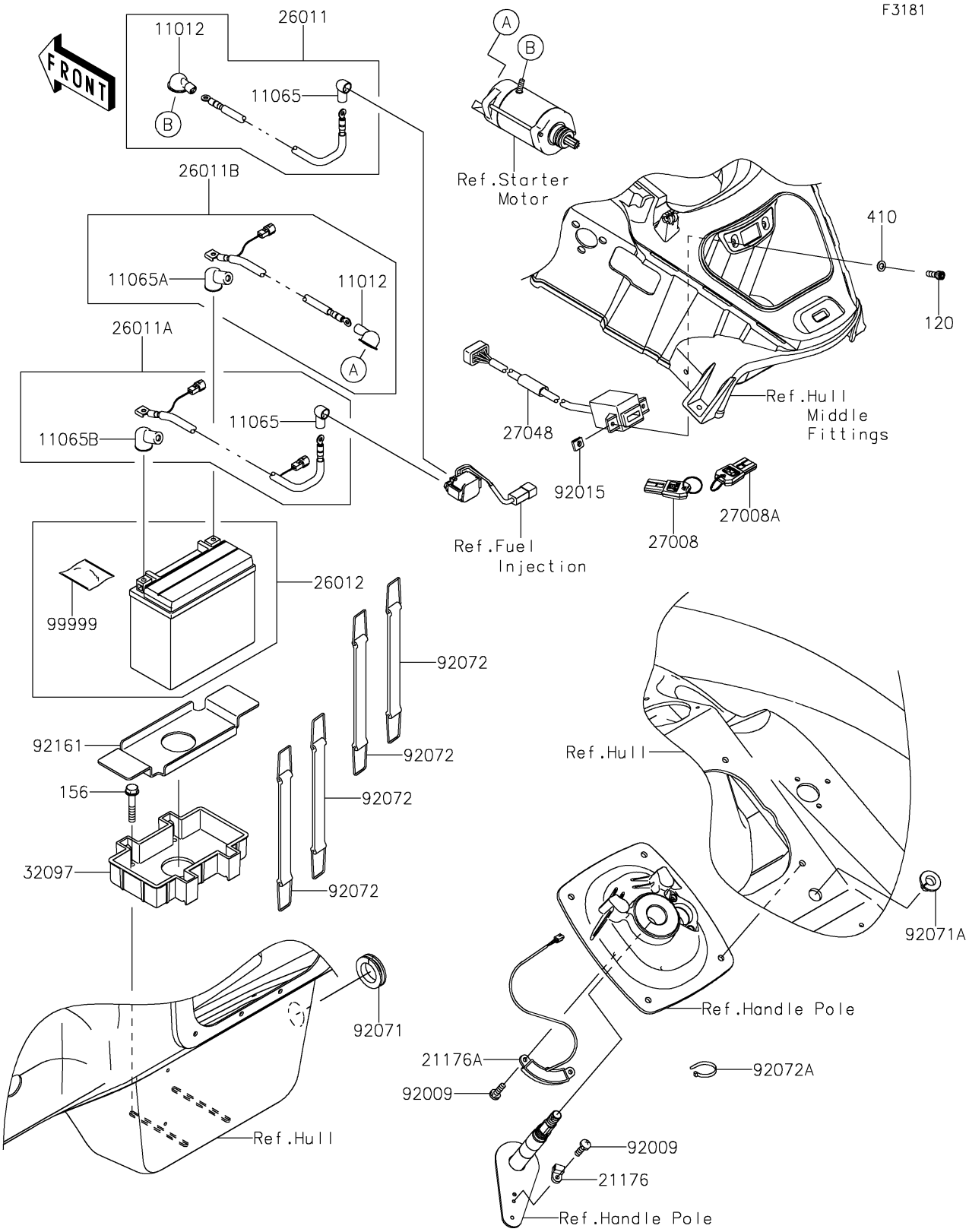

© 2026 Kawasaki Motors Corp., U.S.A.

2019 JET SKI® Ultra® 310X SE

PARTS LIST

Electrical Equipment

ITEM NAME	PART NUMBER	QUANTITY

© 2026 Kawasaki Motors Corp., U.S.A.