2019 JET SKI® Ultra® 310X SE

PARTS DIAGRAM

Intake Silencer

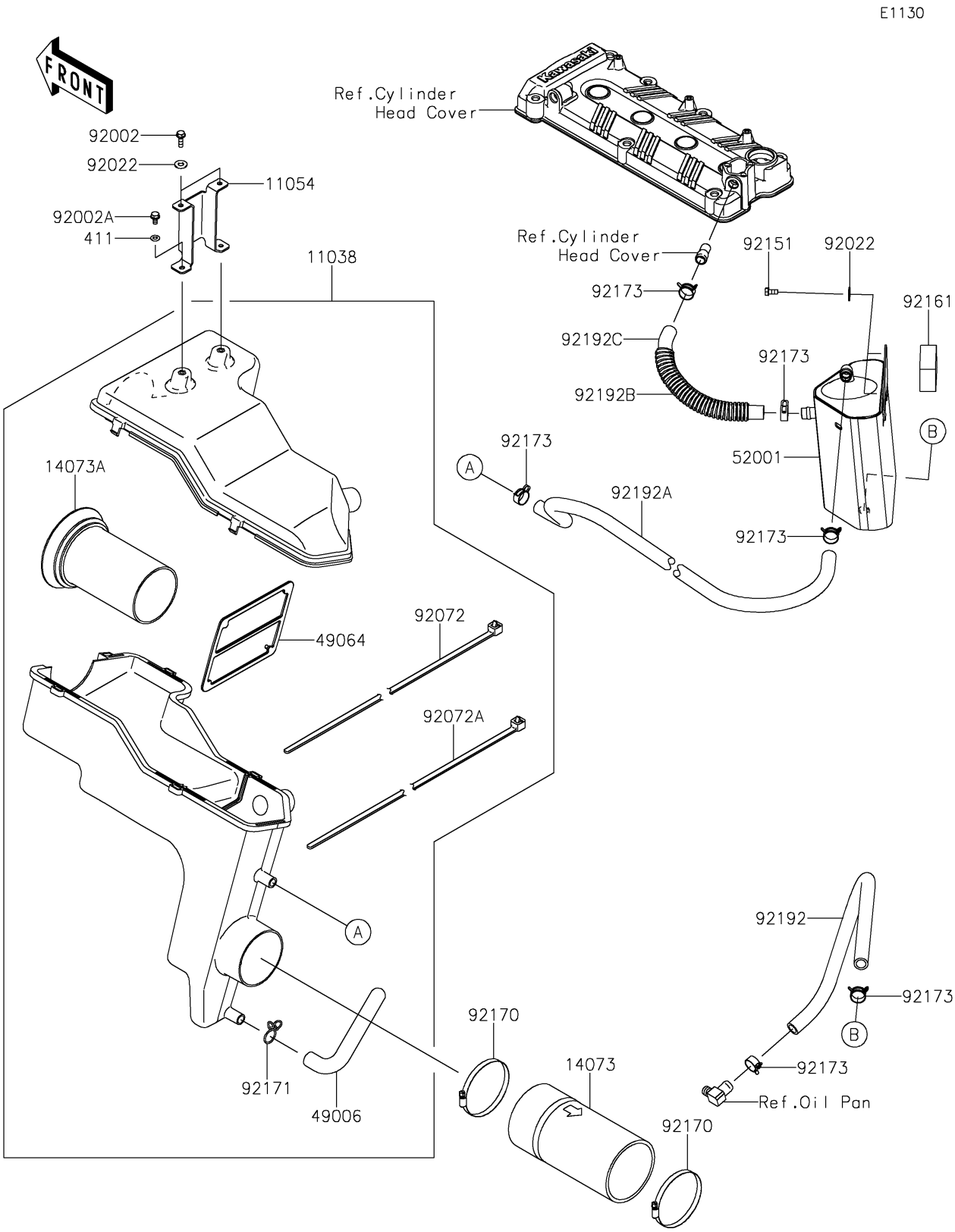

© 2026 Kawasaki Motors Corp., U.S.A.

2019 JET SKI® Ultra® 310X SE

Kawasaki
Let the Good Times Roll®

PARTS LIST

Intake Silencer

ITEM NAME	PART NUMBER	QUANTITY
CASE-ASSY-AIR FILTER (Ref # 11038)	11038-3710	1
BRACKET,AIR BOX (Ref # 11054)	11054-3745	1
DUCT,A/C-COMPRESSOR (Ref # 14073)	14073-0782	1
DUCT,INLET (Ref # 14073A)	14073-3844	1
WASHER-PLAIN,6MM (Ref # 411)	411S0600	2
BOOT (Ref # 49006)	49006-3720	1
FILTER-AIR (Ref # 49064)	49064-3704	1
TANK-OIL,SEPARATOR (Ref # 52001)	52001-0008	1
BOLT,6X20 (Ref # 92002)	92002-3755	2
BOLT,6X12 (Ref # 92002A)	92002-3763	2
WASHER,6.5X20X1.5 (Ref # 92022)	92022-3710	4
BAND,L=914 (Ref # 92072)	92072-0708	1
BAND,L=619 (Ref # 92072A)	92072-0709	1
BOLT,6X14 (Ref # 92151)	92151-3788	2
DAMPER (Ref # 92161)	92161-1595	1
CLAMP (Ref # 92170)	92170-3760	2
CLAMP,BOOT (Ref # 92171)	92171-3711	1
CLAMP (Ref # 92173)	92173-1039	6
TUBE,OIL TANK-OIL PAN (Ref # 92192)	92192-1067	1
TUBE,OIL TANK-A/C (Ref # 92192A)	92192-3769	1
TUBE,CORRUGATED,L=160 (Ref # 92192B)	92192-3832	1
TUBE,HEAD-OIL TANK (Ref # 92192C)	92192-3854	1

© 2026 Kawasaki Motors Corp., U.S.A.