2019 JET SKI® Ultra® 310X SE

PARTS DIAGRAM

Cylinder/Piston(s)

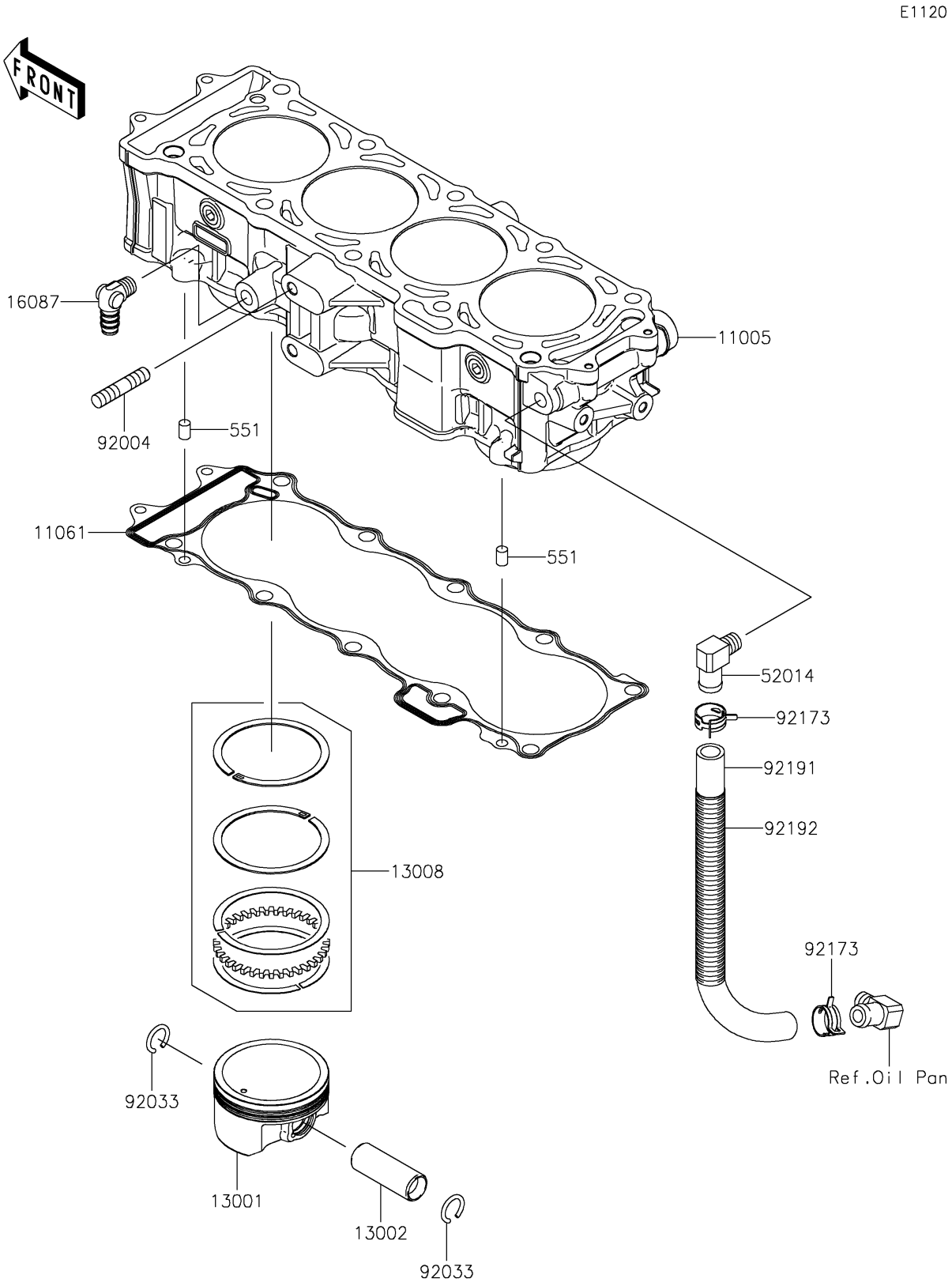

© 2026 Kawasaki Motors Corp., U.S.A.

2019 JET SKI® Ultra® 310X SE

Kawasaki
Let the Good Times Roll®

PARTS LIST

Cylinder/Piston(s)

ITEM NAME	PART NUMBER	QUANTITY
CYLINDER-ENGINE (Ref # 11005)	11005-0630	1
GASKET,CYLINDER BASE (Ref # 11061)	11061-3770	1
PISTON-ENGINE (Ref # 13001)	13001-0787	4
PIN-PISTON (Ref # 13002)	13002-1131	4
RING-SET-PISTON (Ref # 13008)	13008-0564	4
VALVE-CHECK (Ref # 16087)	16087-3714	1
ELBOW (Ref # 52014)	52014-3717	1
PIN-DOWEL (Ref # 551)	551R0812	2
STUD,10X32 (Ref # 92004)	92004-3759	1
RING-SNAP (Ref # 92033)	92033-1188	8
CLAMP (Ref # 92173)	92173-1039	2
TUBE,BREATHER (Ref # 92191)	92191-3983	1
TUBE,CORRUGATED,L=265 (Ref # 92192)	92192-1083	1

© 2026 Kawasaki Motors Corp., U.S.A.