2004 Prairie 360 4X4

PARTS DIAGRAM

Front Hub

F2230

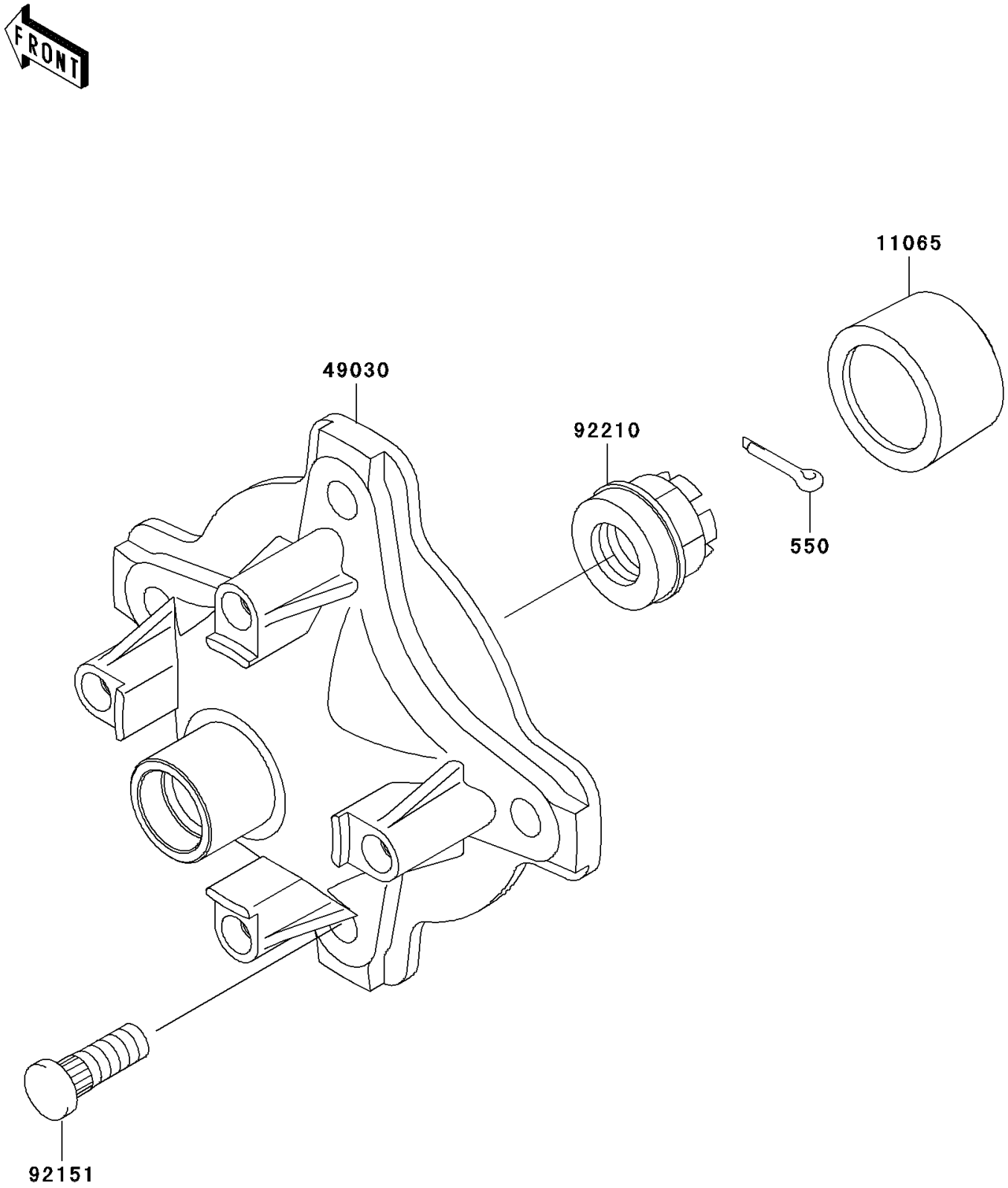

© 2026 Kawasaki Motors Corp., U.S.A.

2004 Prairie 360 4X4

PARTS LIST

Front Hub

ITEM NAME	PART NUMBER	QUANTITY
PIN-COTTER,4.0X25 (Ref # 550)	550D4025	2
CAP,WHEEL (Ref # 11065)	11065-1153	2
HUB,FR (Ref # 49030)	49030-7508	2
BOLT,10X29.5 (Ref # 92151)	92151-1392	8
NUT,CASTLE,18MM (Ref # 92210)	92210-1349	2

© 2026 Kawasaki Motors Corp., U.S.A.