2004 Prairie 360 4X4

PARTS DIAGRAM

Engine Mount

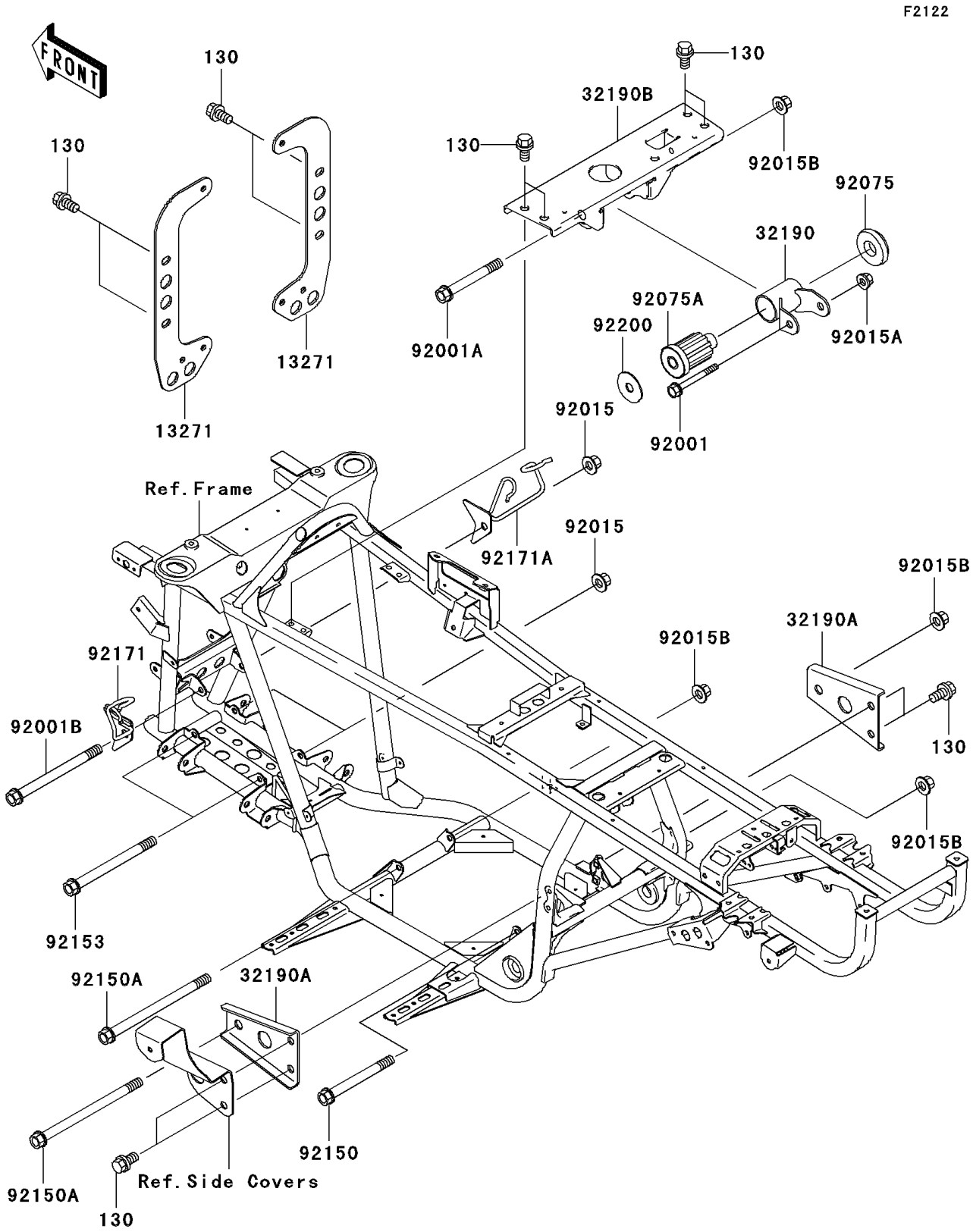

© 2026 Kawasaki Motors Corp., U.S.A.

2004 Prairie 360 4X4

PARTS LIST

Engine Mount

ITEM NAME	PART NUMBER	QUANTITY
BOLT-FLANGED,8X14 (Ref # 130)	130J0814	12
PLATE,OIL COOLER (Ref # 13271)	13271-7519	2
BRACKET-ENGINE (Ref # 32190)	32190-1141	1
BRACKET-ENGINE,RR (Ref # 32190A)	32190-7505	2
BRACKET-ENGINE,HEAD (Ref # 32190B)	32190-7507	1
BOLT,FLANGED,8X60,BLACK (Ref # 92001)	92001-1615	1
BOLT,FLANGED,10X80 (Ref # 92001A)	92001-1709	1
BOLT,FLANGED,10X125 (Ref # 92001B)	92001-1720	1
NUT,FLANGED,10MM (Ref # 92015)	92015-1335	3
NUT,LOCK,FLANGED,8MM (Ref # 92015A)	92015-1397	1
NUT,FLANGED,10MM (Ref # 92015B)	92015-1727	4
DAMPER,ENGINE MOUNT,SIDE (Ref # 92075)	92075-1274	1
DAMPER,ENGINE MOUNT,MAIN (Ref # 92075A)	92075-1377	1
BOLT,FLANGED,10X95 (Ref # 92150)	92150-1230	1
BOLT,FLANGED,10X150 (Ref # 92150A)	92150-1686	2
BOLT,FLANGED,10X120 (Ref # 92153)	92153-7502	2
CLAMP,BRAKE HOSE,LH (Ref # 92171)	92171-1535	1
CLAMP,BRAKE HOSE,RH (Ref # 92171A)	92171-1540	1
WASHER,10.5X38.1X1.52 (Ref # 92200)	92200-7504	1

© 2026 Kawasaki Motors Corp., U.S.A.