2016 JET SKI® STX®-15F

PARTS DIAGRAM

Hull Front Fittings

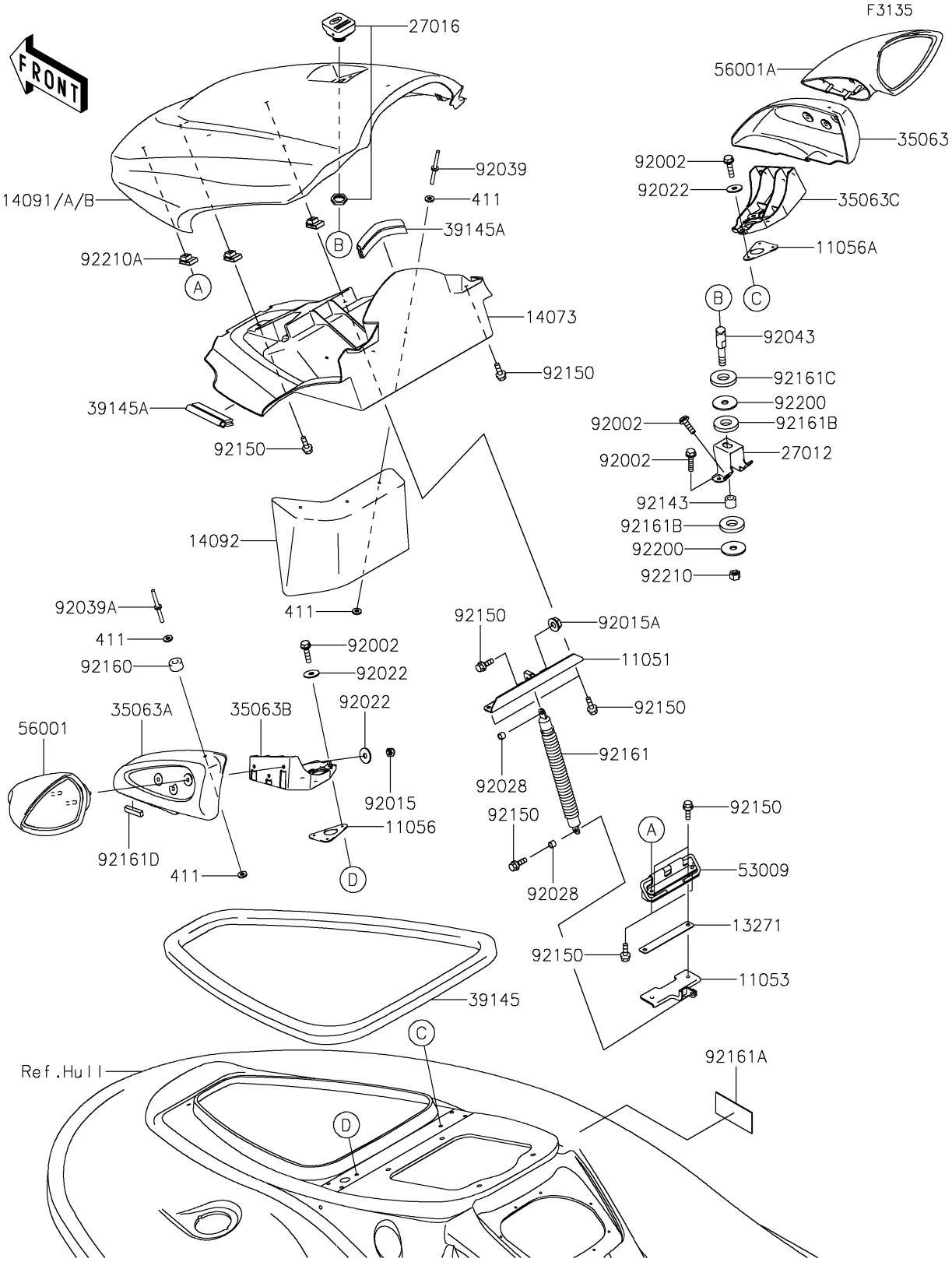

© 2026 Kawasaki Motors Corp., U.S.A.

2016 JET SKI® STX®-15F

PARTS LIST

Hull Front Fittings

ITEM NAME	PART NUMBER	QUANTITY

© 2026 Kawasaki Motors Corp., U.S.A.