2016 Ninja® 300 SE

PARTS DIAGRAM

Labels

F2860

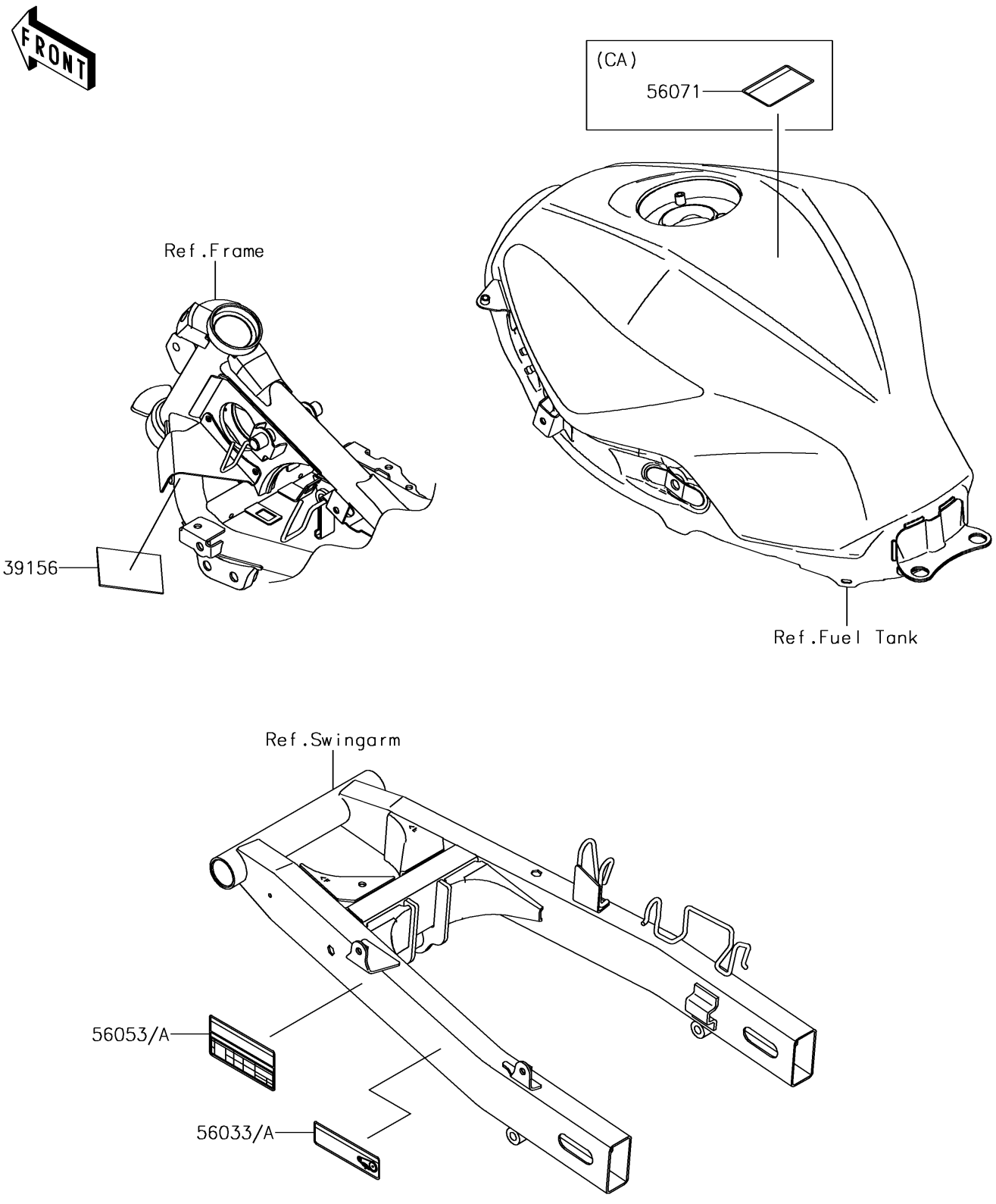

© 2026 Kawasaki Motors Corp., U.S.A.

2016 Ninja® 300 SE

PARTS LIST

Labels

ITEM NAME	PART NUMBER	QUANTITY
PAD,LABEL BRACKET (Ref # 39156)	39156-0457	1
LABEL-MANUAL,CHAIN (Ref # 56033)	56033-0850	1
LABEL-MANUAL,CHAIN (Ref # 56033A)	56033-0853	1
LABEL-SPECIFICATION,TIRE&LOAD (Ref # 56053)	56053-0974	1
LABEL-SPECIFICATION,TIRE&LOAD (Ref # 56053A)	56053-0975	1

© 2026 Kawasaki Motors Corp., U.S.A.