2004 Prairie 360 4X4

PARTS DIAGRAM

Carburetor

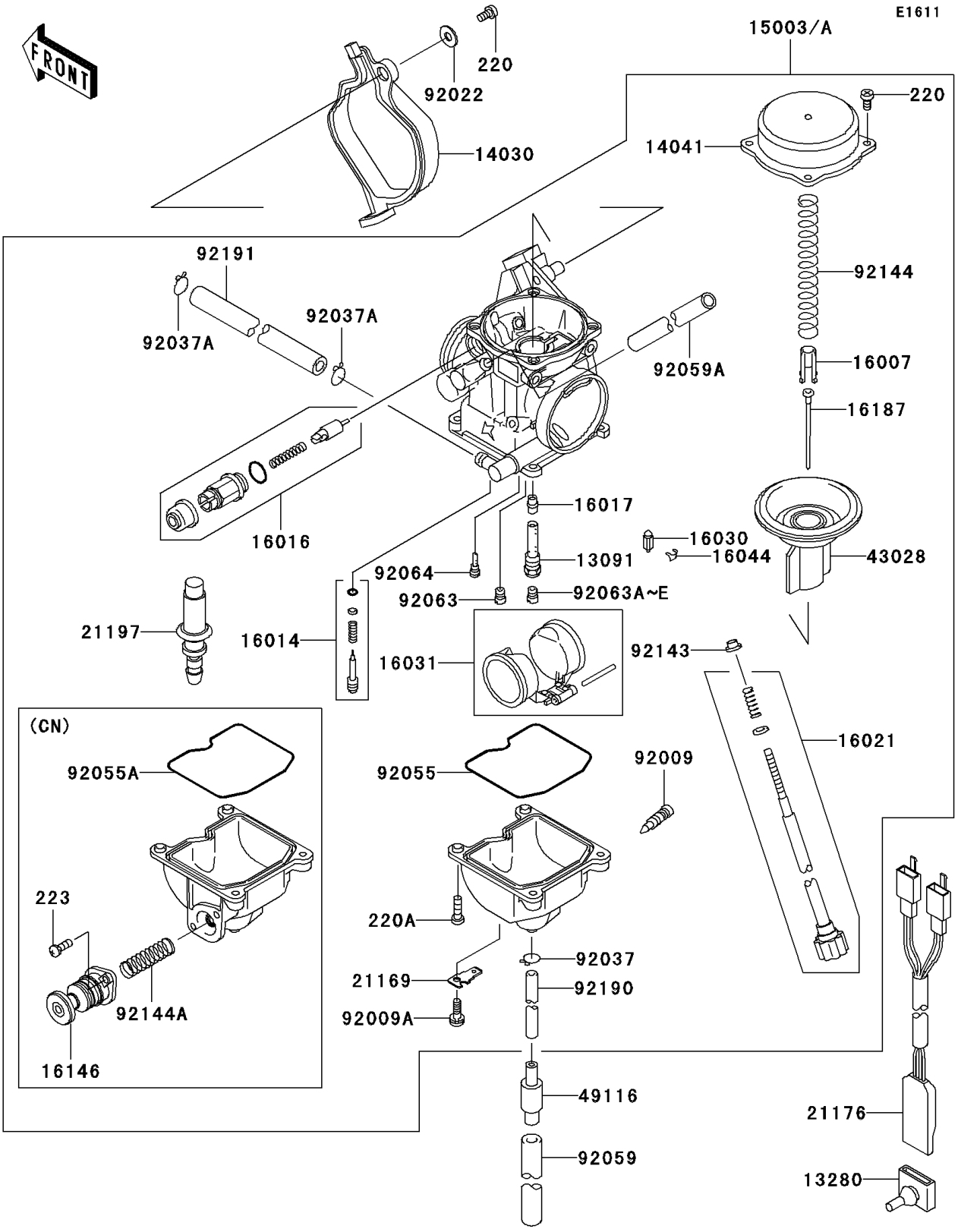

© 2026 Kawasaki Motors Corp., U.S.A.

2004 Prairie 360 4X4

PARTS LIST

Carburetor

ITEM NAME	PART NUMBER	QUANTITY
HOLDER,NEEDLE JET (Ref # 13091)	13091-1914	1
HOLDER,CARBURETOR (Ref # 13280)	13280-1253	1
COVER-CARBURETOR (Ref # 14030)	14030-1054	1
COVER-COMP,MIXING,INSIDE (Ref # 14041)	14041-1061	1
SEAT-SPRING,VALVE (Ref # 16007)	16007-1134	1
SCREW-PILOT AIR (Ref # 16014)	16014-1081	1
PLUNGER,STARTER (Ref # 16016)	16016-1101	1
JET-NEEDLE,#6 (Ref # 16017)	16017-1254	1
SCREW-THROTTLE STOP (Ref # 16021)	16021-1242	1
VALVE-FLOAT (Ref # 16030)	16030-1007	1
FLOAT (Ref # 16031)	16031-1077	1
CLAMP,FLOAT VALVE (Ref # 16044)	16044-007	1
NEEDLE-JET,N2LQ (Ref # 16187)	16187-1236	1
TERMINAL (Ref # 21169)	21169-1072	1
SENSOR,CARBURETOR (Ref # 21176)	21176-1111	1
HEATER (Ref # 21197)	21197-1006	1
DIAPHRAGM,VALVE (Ref # 43028)	43028-1081	1
VALVE-ASSY (Ref # 49116)	49116-1126	1
SCREW,DRAIN,6X0.75 (Ref # 92009)	92009-1551	1
SCREW (Ref # 92009A)	92009-1713	1
WASHER,5.2X13X1 (Ref # 92022)	92022-1380	1
CLAMP,TUBE (Ref # 92037)	92037-1201	1
CLAMP,TUBE (Ref # 92037A)	92037-1531	2
TUBE,7X10X100 (Ref # 92059)	92059-1736	1
TUBE,6.5X9.5X320 (Ref # 92059A)	92059-1861	1
JET-MAIN,#90 (Ref # 92063)	92063-1003	1
JET-MAIN,#152 (Ref # 92063B)	92063-1331	1
SCREW-PAN-CROS,4X8 (Ref # 220)	220B0408	5
SCREW-PAN-CROS,4X14 (Ref # 220A)	220D0414	4

© 2026 Kawasaki Motors Corp., U.S.A.

2004 Prairie 360 4X4

PARTS LIST

Carburetor

ITEM NAME	PART NUMBER	QUANTITY
JET-MAIN,#155 (Ref # 92063C)	92063-1332	1
JET-MAIN,#158 (Ref # 92063D)	92063-1344	1
JET-MAIN,#160 (Ref # 92063E)	92063-1345	1
JET-PILOT,#35 (Ref # 92064)	92064-1101	1
COLLAR (Ref # 92143)	92143-1589	1
SPRING,VACUUM VALVE (Ref # 92144)	92144-1066	1
TUBE,4.5X8X330 (Ref # 92190)	92190-1557	1
TUBE,6.5X11.5X130 (Ref # 92191)	92191-1144	1
CARBURETOR-ASSY (Ref # 15003)	15003-1686	1
CARBURETOR-ASSY (Ref # 15003A)	15003-1688	1
COVER-ASSY,PUMP (Ref # 16146)	16146-1129	1
RING-O,FLOAT CHAMBER (Ref # 92055)	92055-1222	1
RING-O,FLOAT CHAMBER (Ref # 92055A)	92055-1518	1
JET-MAIN,#150 (Ref # 92063A)	92063-1330	1
SCREW-PAN-WS-CROS,4X12 (Ref # 223)	223C0412	2
SPRING,PUMP (Ref # 92144A)	92144-1672	1

© 2026 Kawasaki Motors Corp., U.S.A.