2016 Ninja® 300 SE

PARTS DIAGRAM

Handlebar

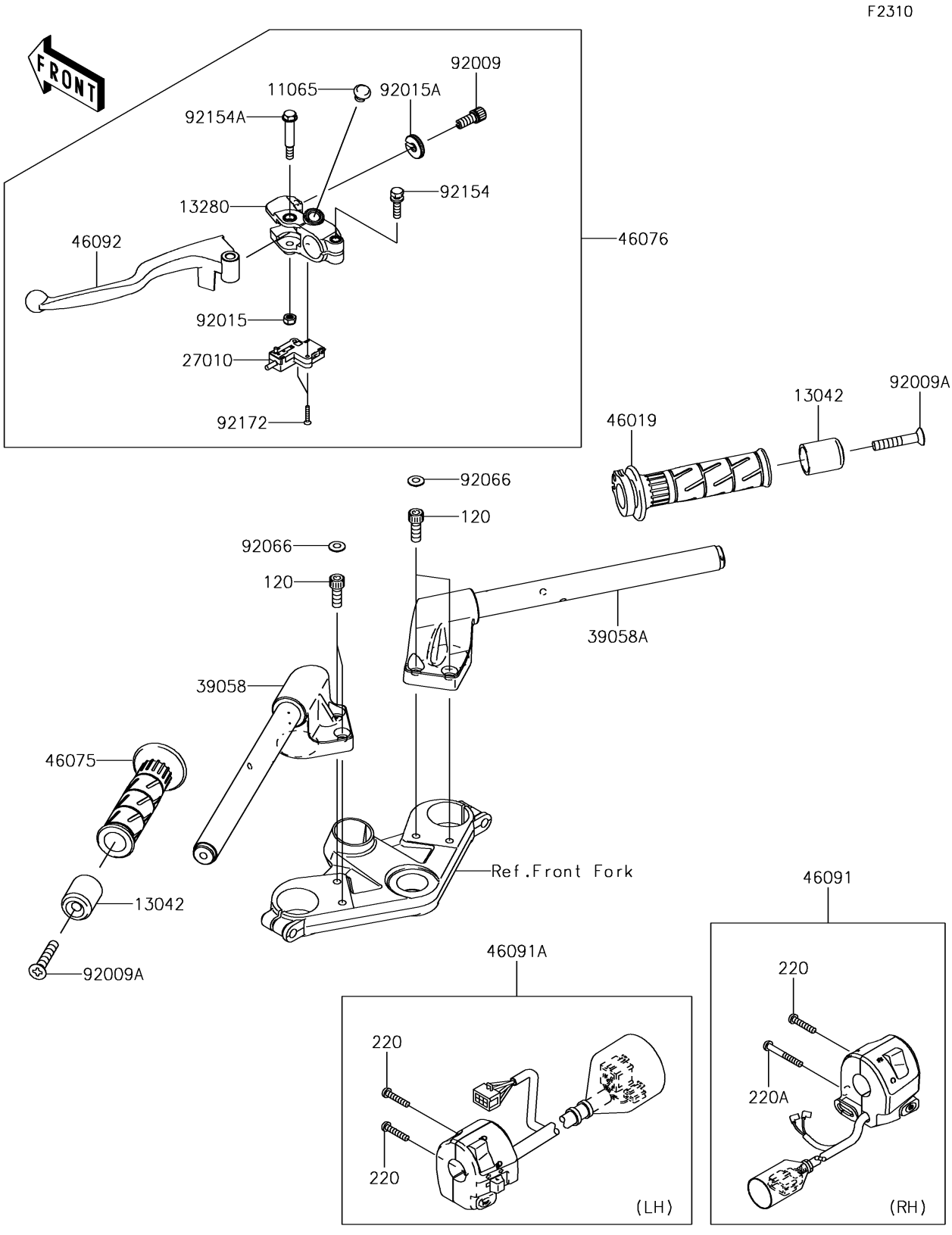

© 2026 Kawasaki Motors Corp., U.S.A.

2016 Ninja® 300 SE

PARTS LIST

Handlebar

ITEM NAME	PART NUMBER	QUANTITY
CAP,DUMMY (Ref # 11065)	11065-0921	1
BOLT-SOCKET,8X22 (Ref # 120)	120CB0822	4
WEIGHT,HANDLE (Ref # 13042)	13042-0032	2
HOLDER,CLUTCH LEVER (Ref # 13280)	13280-0847	1
SCREW-PAN-CROS,5X25 (Ref # 220)	220AB0525	3
SCREW-PAN-CROS,5X40 (Ref # 220A)	220AB0540	1
SWITCH,CLUTCH (Ref # 27010)	27010-0729	1
HANDLE-COMP,LH,F.S.BLACK (Ref # 39058)	39058-0007-18R	1
HANDLE-COMP,RH,F.S.BLACK (Ref # 39058A)	39058-0008-18R	1
GRIP-ASSY,THROTTLE (Ref # 46019)	46019-0060	1
GRIP,HANDLE,LH (Ref # 46075)	46075-0564	1
LEVER-ASSY-GRIP,CLUTCH (Ref # 46076)	46076-0123	1
HOUSING-ASSY-CONTROL,RH (Ref # 46091)	46091-0205	1
HOUSING-ASSY-CONTROL,LH (Ref # 46091A)	46091-0249	1
LEVER-GRIP,CLUTCH (Ref # 46092)	46092-0562	1
SCREW,CABLE ADJUST,8MM,BLACK (Ref # 92009)	92009-1134	1
SCREW,8X45 (Ref # 92009A)	92009-1257	2
NUT,LOCK,6MM,BLACK (Ref # 92015)	92015-1191	1
NUT,CABLE ADJUST LOCK,8MM,BLK (Ref # 92015A)	92015-1197	1
PLUG (Ref # 92066)	92066-1216	4
BOLT (Ref # 92154)	92154-1827	1
BOLT,FLANGED,6X44 (Ref # 92154A)	92154-2331	1
SCREW,3X16 (Ref # 92172)	92172-0183	2

© 2026 Kawasaki Motors Corp., U.S.A.