2004 Prairie 360 4X4

PARTS DIAGRAM

Gear Change Mechanism

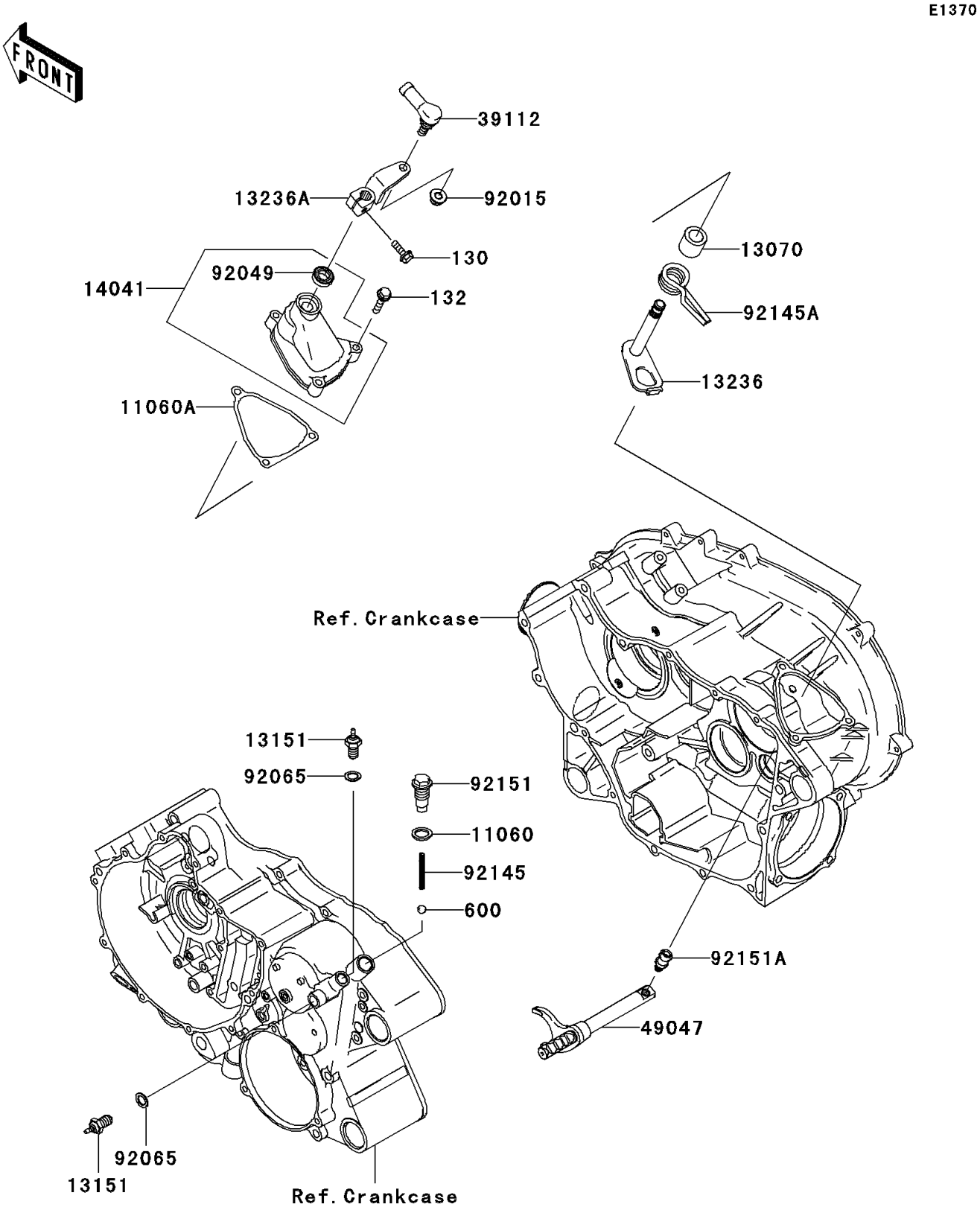

© 2026 Kawasaki Motors Corp., U.S.A.

2004 Prairie 360 4X4

PARTS LIST

Gear Change Mechanism

ITEM NAME	PART NUMBER	QUANTITY
BOLT-FLANGED,6X20 (Ref # 130)	130Z0620	1
BOLT-FLANGED-SMALL,6X30 (Ref # 132)	132Y0630	3
BALL-STEEL,5/16" (Ref # 600)	600A1000	1
GASKET,14X20X2 (Ref # 11060)	11060-1287	1
GASKET,CHANGE LEVER COVER (Ref # 11060A)	11060-1956	1
GUIDE (Ref # 13070)	13070-1352	1
SWITCH-COMP,NEUTRAL (Ref # 13151)	13151-1080	2
LEVER-COMP,CHANGE (Ref # 13236)	13236-0051	1
LEVER-COMP,CHANGE LEVER (Ref # 13236A)	13236-1400	1
COVER-COMP,CHANGE LEVER (Ref # 14041)	14041-1136	1
RODEND-TIE,CHANGE LEVER (Ref # 39112)	39112-1080	1
ROD-SHIFT (Ref # 49047)	49047-1104	1
NUT,8MM (Ref # 92015)	92015-1432	1
SEAL-OIL,TB12205.5 (Ref # 92049)	92049-1271	1
GASKET,10.5X16X1 (Ref # 92065)	92065-058	2
SPRING,CHANGE POSITION (Ref # 92145)	92145-1297	1
SPRING,CHANGE LEVER (Ref # 92145A)	92145-1299	1
BOLT,CHANGE POSITION (Ref # 92151)	92151-1687	1
BOLT,SHIFT ROD (Ref # 92151A)	92151-1699	1

© 2026 Kawasaki Motors Corp., U.S.A.