2002 Prairie 300

PARTS DIAGRAM

Chassis Electrical Equipment

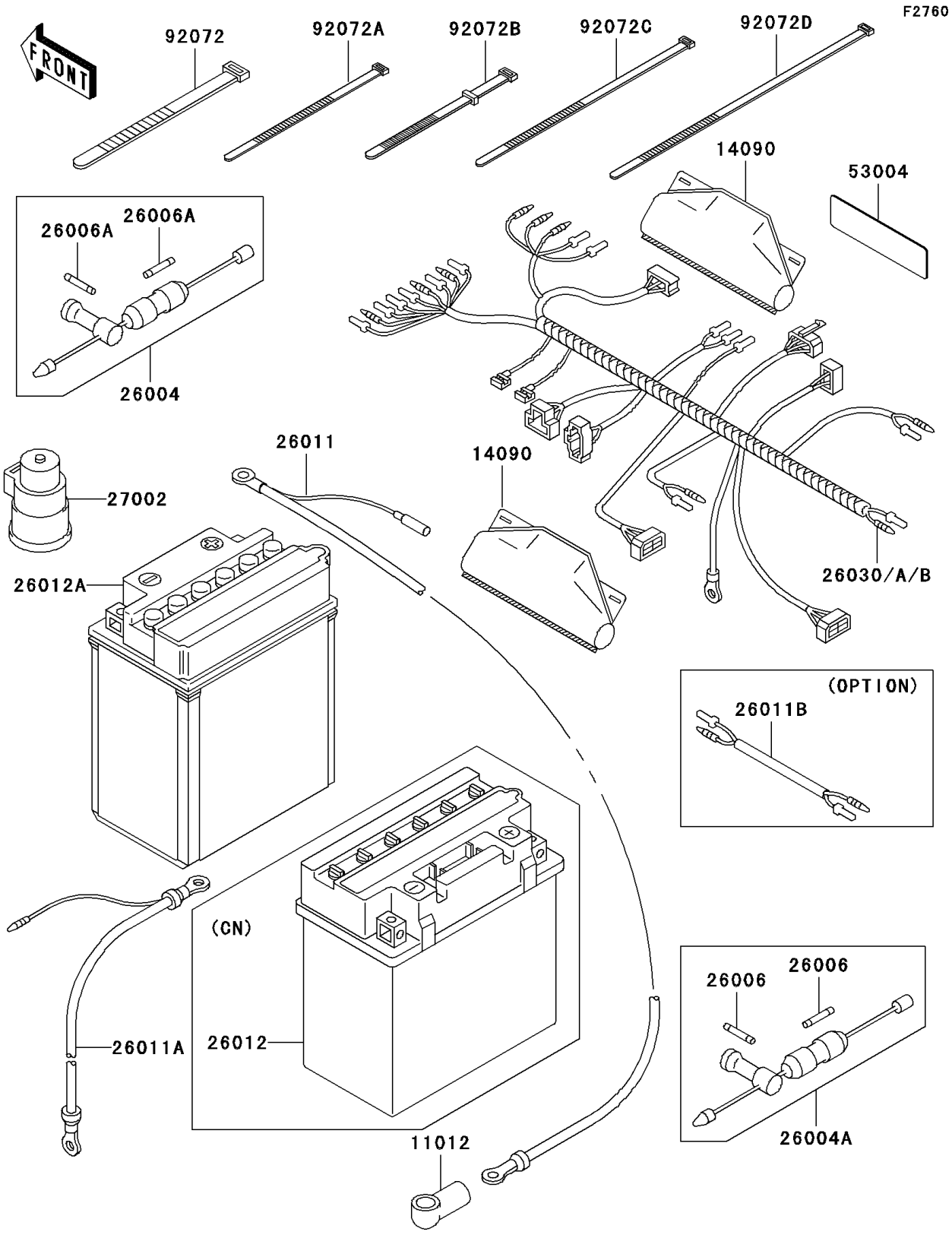

© 2026 Kawasaki Motors Corp., U.S.A.

2002 Prairie 300

PARTS LIST

Chassis Electrical Equipment

ITEM NAME	PART NUMBER	QUANTITY
CAP,TERMINAL (Ref # 11012)	11012-1354	1
COVER,COUPLER (Ref # 14090)	14090-1331	4
FUSE-ASSY (Ref # 26004)	26004-1114	1
FUSE-ASSY (Ref # 26004A)	26004-3715	1
FUSE,30A,L=30 (Ref # 26006)	26006-1059	2
FUSE,5A,L=30 (Ref # 26006A)	26006-1074	2
WIRE-LEAD,BATTERY(+) (Ref # 26011)	26011-1513	1
WIRE-LEAD,BATTERY(-) (Ref # 26011A)	26011-1637	1
WIRE-LEAD,ACCESSORY CONNECT (Ref # 26011B)	26011-1763	AR
HARNESS,MAIN (Ref # 26030B)	26030-1786	1
RELAY-ASSY (Ref # 27002)	27002-1095	1
MAT (Ref # 53004)	53004-1070	1
BAND,L=123 (Ref # 92072)	92072-030	4
BAND,L=149 (Ref # 92072A)	92072-031	3
BAND,L=186 (Ref # 92072B)	92072-056	2
BAND,L=292.1 (Ref # 92072D)	92072-3509	2
BATTERY,YB16CL-B,12V 19AH (Ref # 26012)	26012-1384	1
BATTERY,YB14A-A2,12V 14AH (Ref # 26012A)	26012-1388	1
BAND,L=188 (Ref # 92072C)	92072-1239	18
BAND,L=188 (Ref # 92072C)	92072-1239	19

© 2026 Kawasaki Motors Corp., U.S.A.