1999 Prairie 300

PARTS DIAGRAM

Guard(s)

F2680

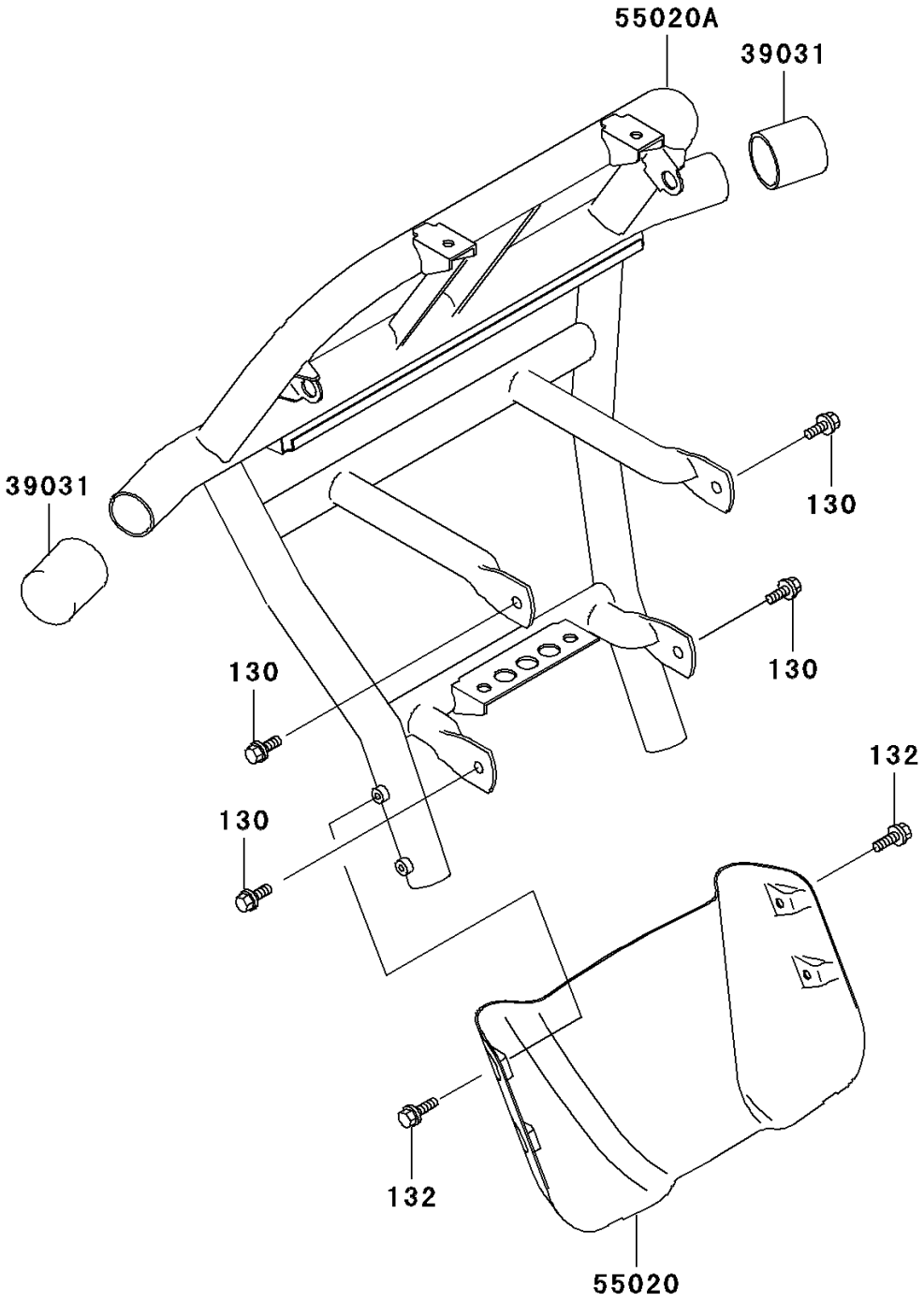

© 2026 Kawasaki Motors Corp., U.S.A.

1999 Prairie 300

PARTS LIST

Guard(s)

ITEM NAME	PART NUMBER	QUANTITY
BOLT-FLANGED,8X14 (Ref # 130)	130J0814	4
BOLT-FLANGED-SMALL,6X16 (Ref # 132)	132J0616	4
CAP-END,BUMPER PIPE (Ref # 39031)	39031-1059	2
GUARD,SKID,FR,P.C.GRAY (Ref # 55020)	55020-1649-CQ	1
GUARD,FR,P.C.GRAY (Ref # 55020A)	55020-1654-CQ	1

© 2026 Kawasaki Motors Corp., U.S.A.