2002 Prairie 300

PARTS DIAGRAM

Meter(s)(CN)

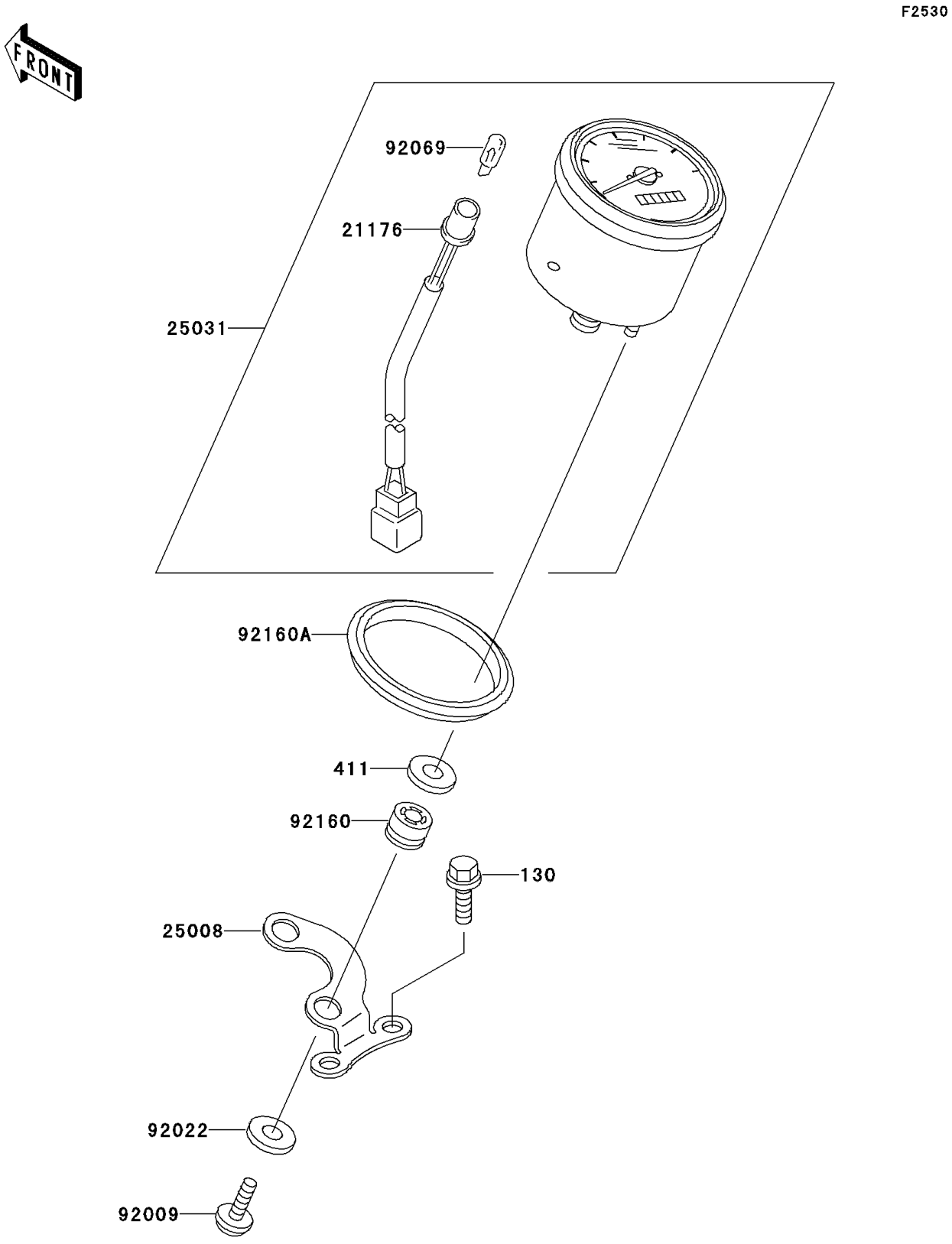

© 2026 Kawasaki Motors Corp., U.S.A.

2002 Prairie 300

PARTS LIST

Meter(s)(CN)

ITEM NAME	PART NUMBER	QUANTITY
BOLT-FLANGED,8X14 (Ref # 130)	130J0814	2
WASHER-PLAIN,8MM (Ref # 411)	411B0800	2
CORD ASSY,SPEEDOMETER (Ref # 21176)	21176-1059	1
BRACKET-METER (Ref # 25008)	25008-1221	1
METER-ASSY,KPH (Ref # 25031)	25031-1083	1
SCREW,5X12 (Ref # 92009)	92009-3740	2
WASHER,6.5X16X1.0 (Ref # 92022)	92022-1093	2
BULB,12V 1.7W,T10 (Ref # 92069)	92069-1059	1
DAMPER (Ref # 92160)	92160-1461	2
DAMPER,SPEEDOMETER (Ref # 92160A)	92160-1959	1

© 2026 Kawasaki Motors Corp., U.S.A.