2000 Prairie 300

PARTS DIAGRAM

Fuel Tank

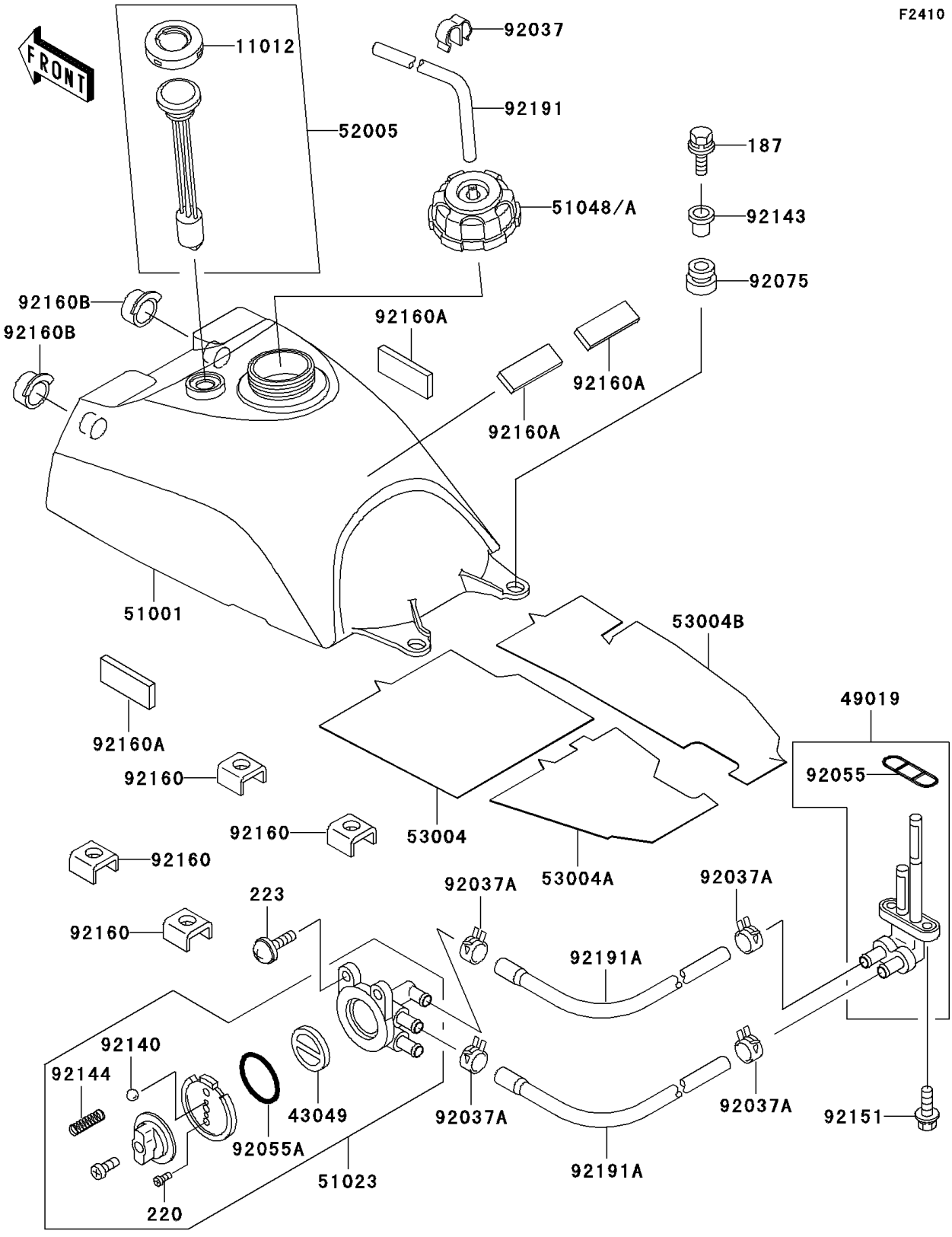

© 2026 Kawasaki Motors Corp., U.S.A.

2000 Prairie 300

PARTS LIST

Fuel Tank

ITEM NAME	PART NUMBER	QUANTITY
BOLT-UPSET-WSP,6X35 (Ref # 187)	187G0635	2
SCREW-PAN-CROS,3X8 (Ref # 220)	220B0308	2
SCREW-PAN-WS-CROS,6X10 (Ref # 223)	223C0610	2
CAP,FUEL GAUGE (Ref # 11012)	11012-1627	1
PACKING,TAP VALVE (Ref # 43049)	43049-1066	1
FILTER-FUEL (Ref # 49019)	49019-1084	1
TANK-COMP-FUEL (Ref # 51001)	51001-1542	1
TAP-ASSY,FUEL (Ref # 51023)	51023-1247	1
CAP-ASSY-TANK,FUEL (Ref # 51048)	51048-1129	1
GAUGE,FUEL (Ref # 52005)	52005-1131	1
MAT,FUEL TANK,LH (Ref # 53004)	53004-1125	1
MAT,FUEL TANK,CNT,RR (Ref # 53004A)	53004-1126	1
MAT,FUEL TANK,RH (Ref # 53004B)	53004-1127	1
CLAMP (Ref # 92037)	92037-1458	1
CLAMP,TUBE (Ref # 92037A)	92037-1505	4
RING-O,FUEL TAP PACKING (Ref # 92055)	92055-1112	1
RING-O,TAP LEVER (Ref # 92055A)	92055-1419	1
DAMPER (Ref # 92075)	92075-1787	2
BALL,STAINLESS,5/32" (Ref # 92140)	92140-1051	1
COLLAR,L=19.6 (Ref # 92143)	92143-1100	2
SPRING,FUEL TAP KNOB (Ref # 92144)	92144-1212	1
BOLT,6X14 (Ref # 92151)	92151-1198	2
DAMPER (Ref # 92160)	92160-1773	4
DAMPER (Ref # 92160A)	92160-1834	4
DAMPER (Ref # 92160B)	92160-1909	2
TUBE,5X9.4X450 (Ref # 92191)	92191-1107	1
TUBE (Ref # 92191A)	92191-1247	2

© 2026 Kawasaki Motors Corp., U.S.A.