2016 KX™250F

PARTS DIAGRAM

Fuel Injection

E1530

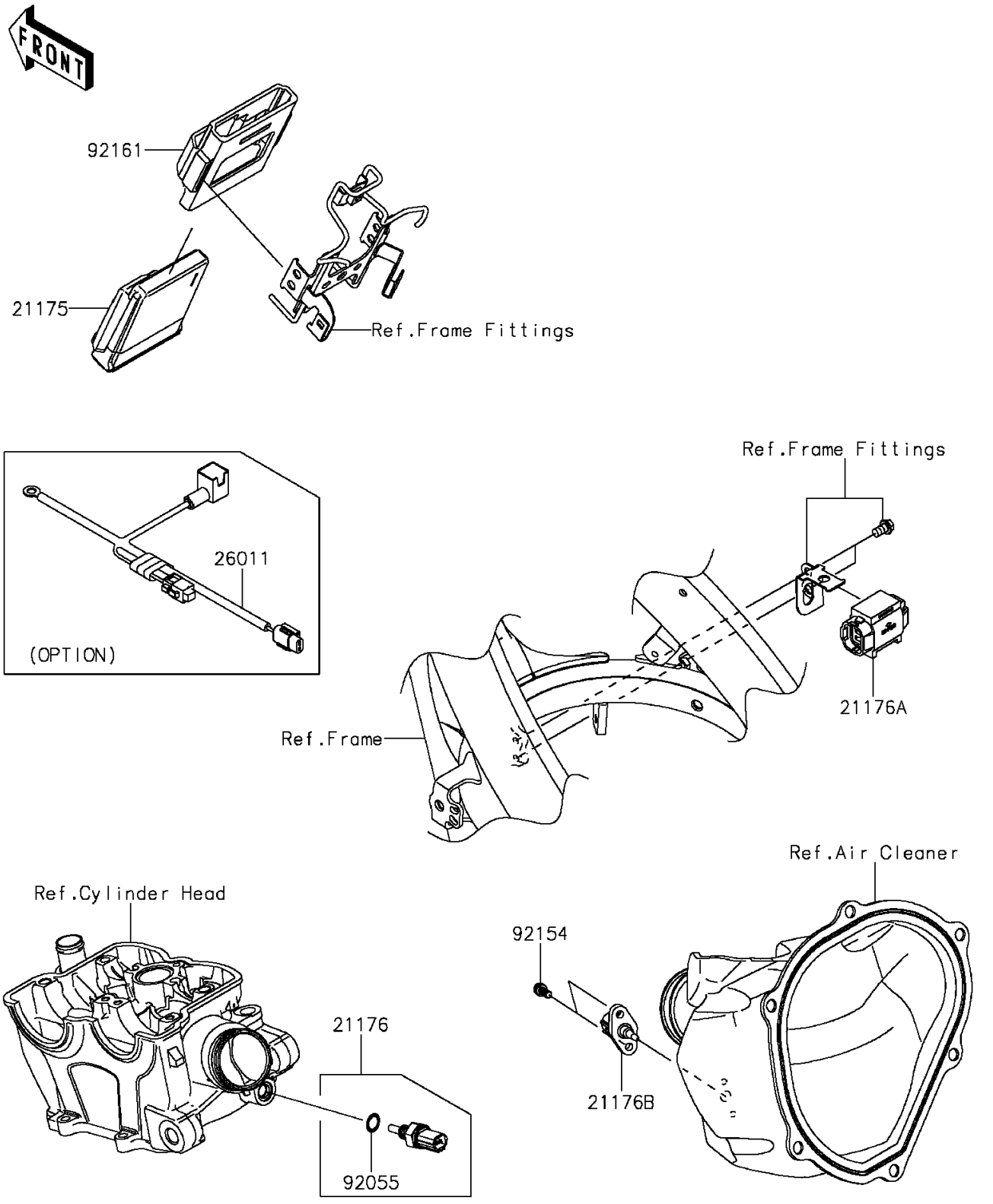

© 2026 Kawasaki Motors Corp., U.S.A.

2016 KX™250F

PARTS LIST

Fuel Injection

ITEM NAME	PART NUMBER	QUANTITY

© 2026 Kawasaki Motors Corp., U.S.A.