2015 KX™250F

PARTS DIAGRAM

Fuel Injection

E1530

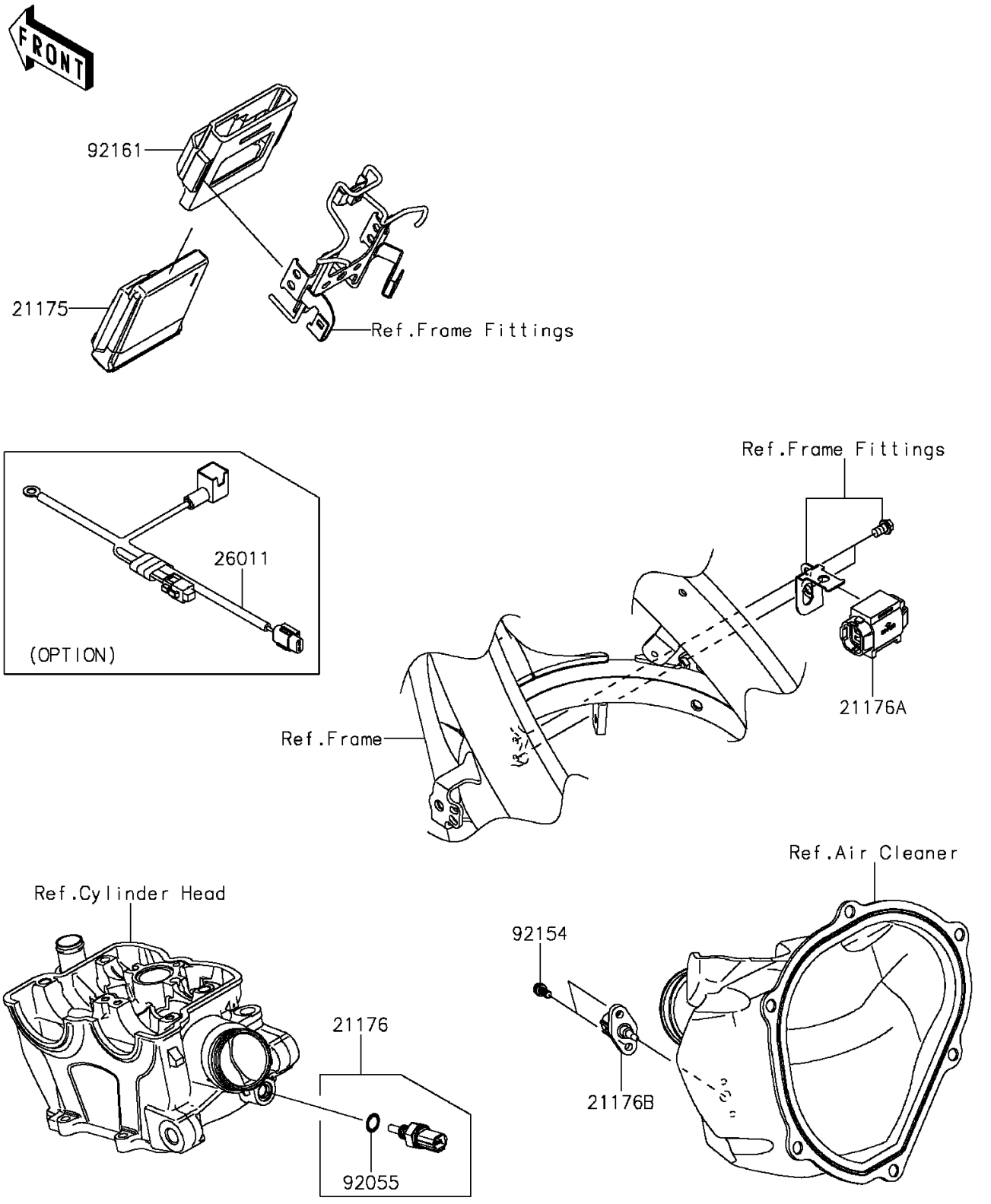

© 2026 Kawasaki Motors Corp., U.S.A.

2015 KX™250F

PARTS LIST

Fuel Injection

ITEM NAME	PART NUMBER	QUANTITY
CONTROL UNIT-ELECTRONIC (Ref # 21175)	21175-0918	1
SENSOR,WATER TEMP (Ref # 21176)	21176-0009	1
SENSOR,VEHICLE-DOWN (Ref # 21176A)	21176-0066	1
SENSOR,AIR TEMP (Ref # 21176B)	21176-0121	1
WIRE-LEAD,BAT. CONNECTION (Ref # 26011)	26011-0246	1
RING-O,9.5X1.9 (Ref # 92055)	92055-0016	1
BOLT,SOCKET,5X14 (Ref # 92154)	92154-0491	2
DAMPER,ECU (Ref # 92161)	92161-0976	1

© 2026 Kawasaki Motors Corp., U.S.A.