2016 KLX®110L

PARTS DIAGRAM

Brake Pedal

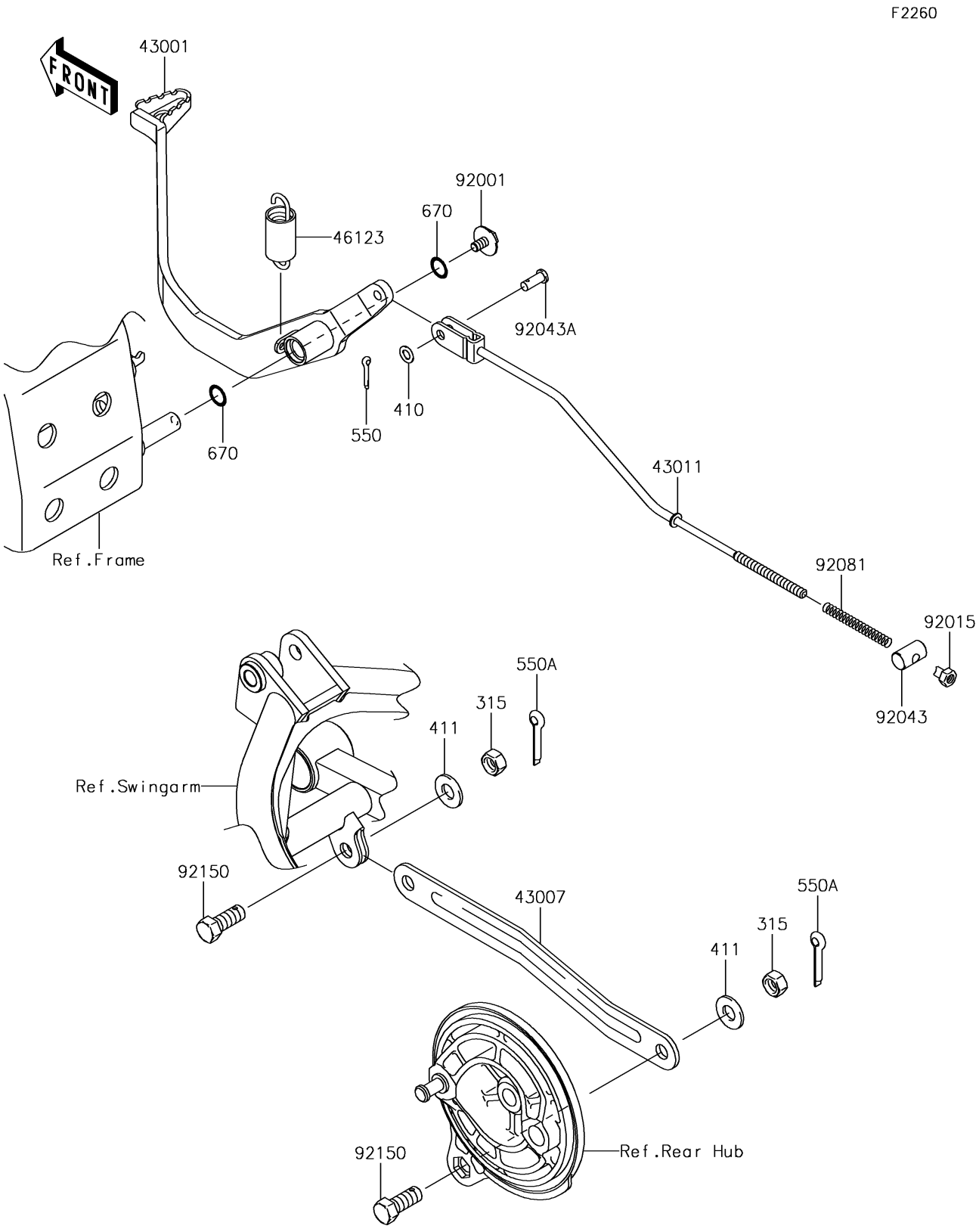

© 2026 Kawasaki Motors Corp., U.S.A.

2016 KLX®110L

PARTS LIST

Brake Pedal

ITEM NAME	PART NUMBER	QUANTITY
NUT-HEX-FINE,10MM (Ref # 315)	315BA1000	2
WASHER-PLAIN-SMALL (Ref # 410)	410AA0600	1
WASHER-PLAIN,10MM (Ref # 411)	411AA1000	2
LEVER-BRAKE,PEDAL (Ref # 43001)	43001-0122	1
ROD-TORQUE (Ref # 43007)	43007-0015	1
ROD-BRAKE (Ref # 43011)	43011-0010	1
SPRING-COMP,BRAKE PEDAL RETURN (Ref # 46123)	46123-1060	1
PIN-COTTER,2.0X15 (Ref # 550)	550AA2015	1
PIN-COTTER,2.0X20 (Ref # 550A)	550AA2020	2
O RING,12MM (Ref # 670)	670B2012	2
BOLT,FLANGED,6X10 (Ref # 92001)	92001-1034	1
NUT,BRAKE ROD (Ref # 92015)	92015-042	1
PIN,BRAKE ROD (Ref # 92043)	92043-0147	1
PIN,6X12.8 (Ref # 92043A)	92043-1542	1
SPRING,BRAKE ROD (Ref # 92081)	92081-1688	1
BOLT,10X25 (Ref # 92150)	92150-1873	2

© 2026 Kawasaki Motors Corp., U.S.A.