2017 KLX®110L

PARTS DIAGRAM

Rear Hub

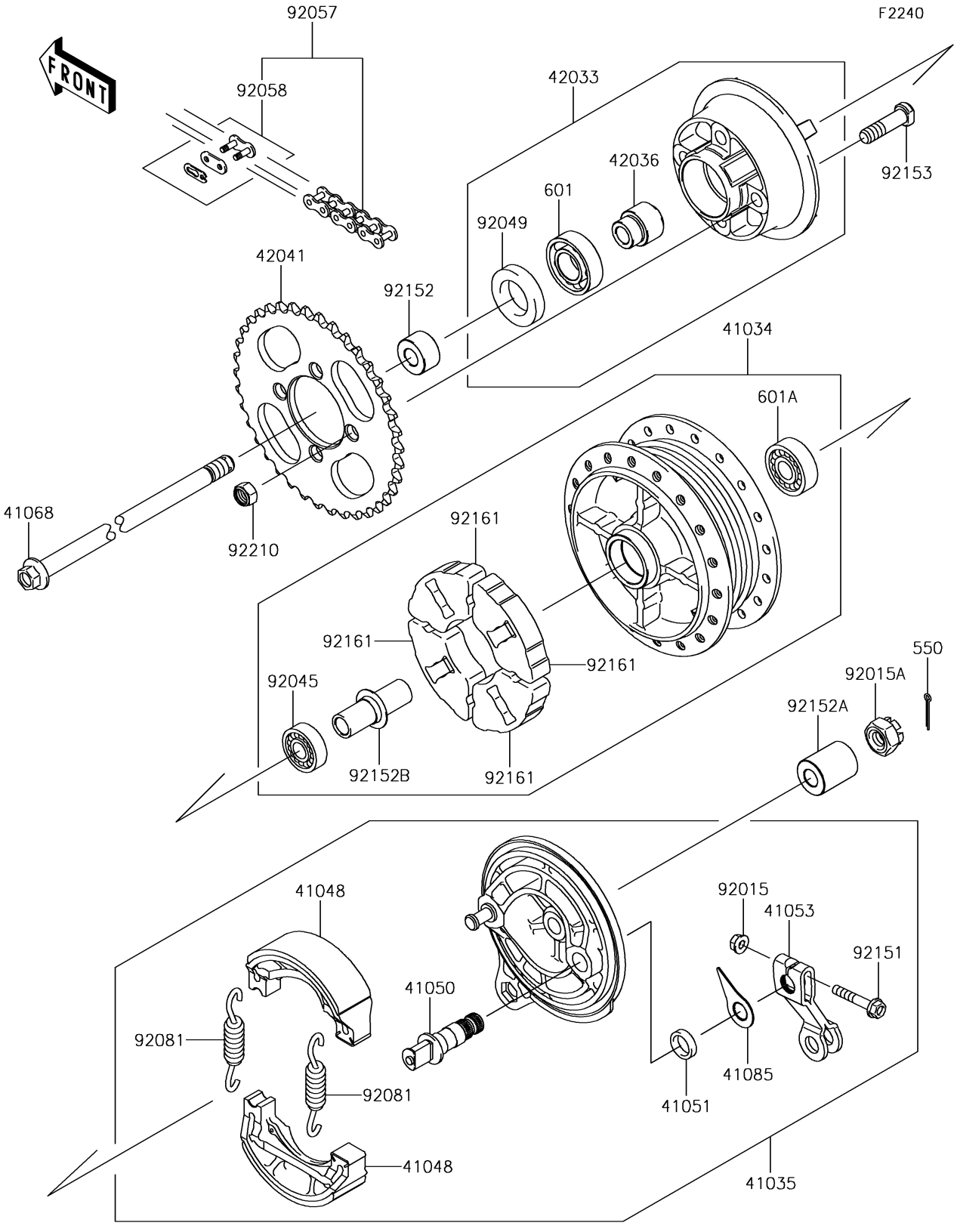

© 2026 Kawasaki Motors Corp., U.S.A.

2017 KLX®110L

PARTS LIST

Rear Hub

ITEM NAME	PART NUMBER	QUANTITY
DRUM-ASSY,REAR BRAKE (Ref # 41034)	41034-0010	1
PANEL-ASSY-BRAKE,RR (Ref # 41035)	41035-0084	1
SHOE-BRAKE (Ref # 41048)	41048-1141	2
CAM-BRAKE (Ref # 41050)	41050-1082	1
SEAL,BRAKE CAM (Ref # 41051)	41051-001	1
LEVER-BRAKE CAM (Ref # 41053)	41053-0021	1
AXLE,RR (Ref # 41068)	41068-0016	1
INDICATOR (Ref # 41085)	41085-1085	1
COUPLING-ASSY,RR HUB (Ref # 42033)	42033-1223	1
SLEEVE,RR HUB COUPLING,L=29 (Ref # 42036)	42036-1292	1
SPROCKET-HUB,38T (Ref # 42041)	42041-0082	1
PIN-COTTER,2.5X30 (Ref # 550)	550S2530	1
BEARING-BALL,#6004UG (Ref # 601)	601B6004UG	1
BEARING-BALL,#6301UG (Ref # 601A)	601B6301UG	1
NUT,FLANGED,6MM (Ref # 92015)	92015-1367	1
NUT,CASTLE,12MM (Ref # 92015A)	92015-1870	1
BEARING-BALL,6201ZC3/5C (Ref # 92045)	92045-1308	1
SEAL-OIL,SC26X42X8 (Ref # 92049)	92049-1490	1
CHAIN,DRIVE,DID420DXX90L (Ref # 92057)	92057-0183	1
JOINT-CHAIN,DRIVE (Ref # 92058)	92058-0006	1
SPRING,BRAKE SHOE (Ref # 92081)	92081-1766	2
BOLT,FLANGED,6X34 (Ref # 92151)	92151-1209	1
COLLAR,RR AXLE,LH,L=14.8 (Ref # 92152)	92152-1405	1
COLLAR,RR AXLE,RH,L=32 (Ref # 92152A)	92152-1406	1
COLLAR,REAR BRAKE DRUM,L=58 (Ref # 92152B)	92152-1409	1
BOLT,10X36 (Ref # 92153)	92153-1120	4
DAMPER,RR HUB SHOCK (Ref # 92161)	92161-0084	4
NUT,LOCK,10MM (Ref # 92210)	92210-1351	4

© 2026 Kawasaki Motors Corp., U.S.A.