2017 KLX®110L

PARTS DIAGRAM

Swingarm

F2141

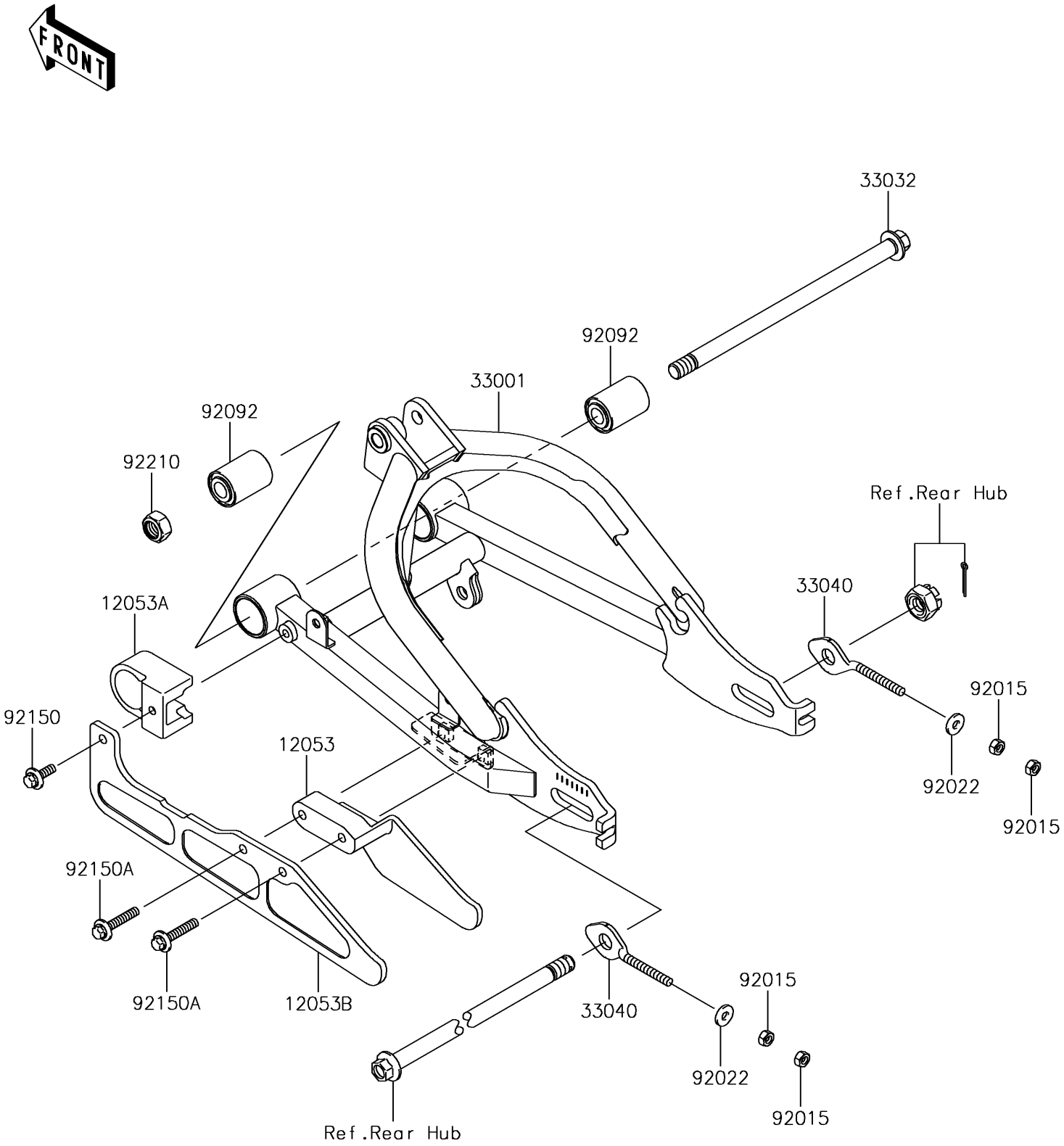

© 2026 Kawasaki Motors Corp., U.S.A.

2017 KLX®110L

PARTS LIST

Swingarm

ITEM NAME	PART NUMBER	QUANTITY
GUIDE-CHAIN,RR,INSIDE (Ref # 12053)	12053-0165	1
GUIDE-CHAIN,FR (Ref # 12053A)	12053-1459	1
GUIDE-CHAIN,RR,OUTSIDE (Ref # 12053B)	12053-1460	1
ARM-COMP-SWING,P.SILVER (Ref # 33001)	33001-0200-458	1
SHAFT-SWING ARM (Ref # 33032)	33032-0035	1
ADJUSTER-CHAIN (Ref # 33040)	33040-1006	2
NUT,6MM (Ref # 92015)	92015-1391	4
WASHER,6.5X16X2 (Ref # 92022)	92022-1565	2
BUSHING-RUBBER (Ref # 92092)	92092-1088	2
BOLT,FLANGED,6X20 (Ref # 92150)	92150-1339	1
BOLT,FLANGED,6X35 (Ref # 92150A)	92150-1527	2
NUT,LOCK,12MM (Ref # 92210)	92210-1373	1

© 2026 Kawasaki Motors Corp., U.S.A.