2017 KLX®110L

PARTS DIAGRAM

Engine Mount

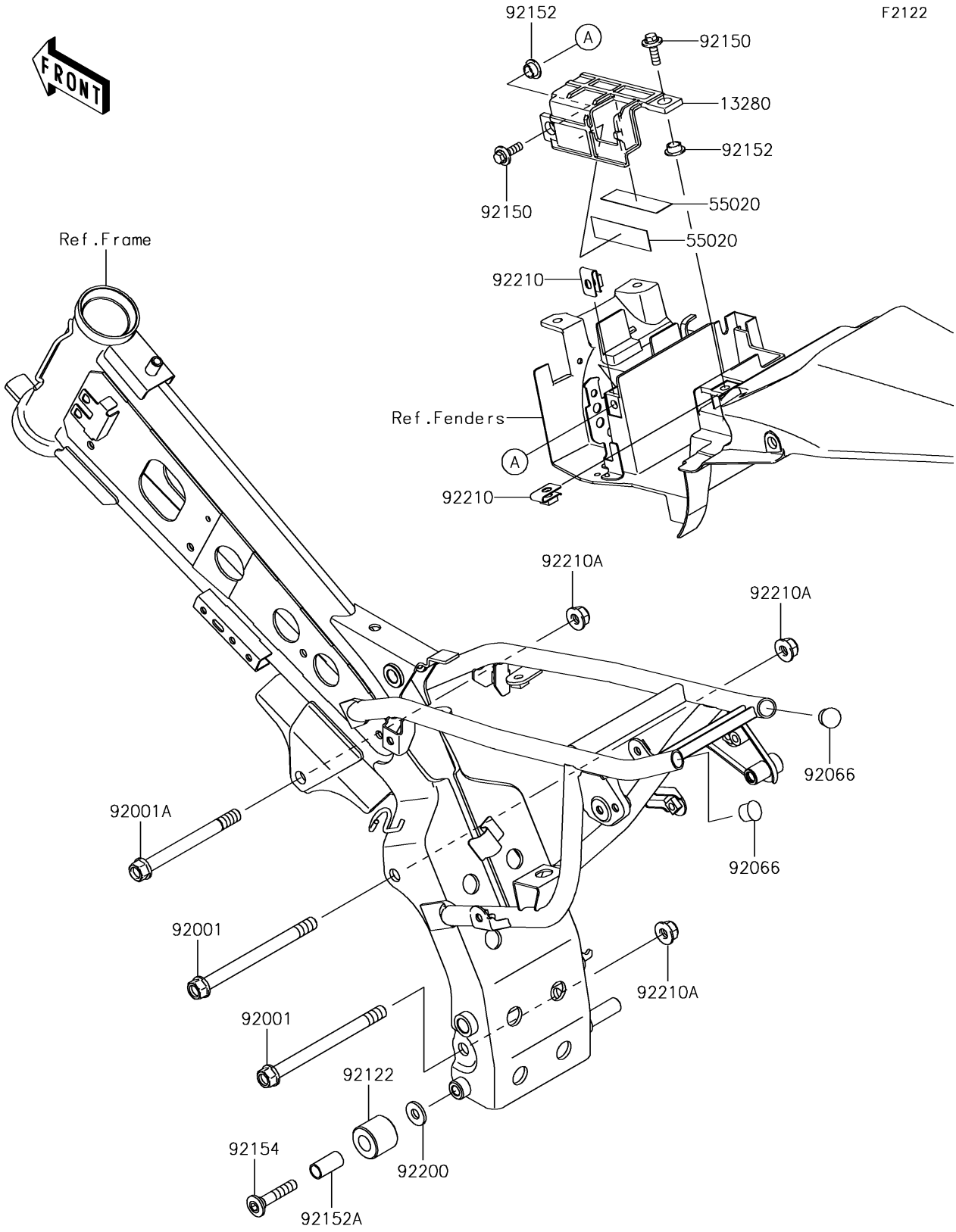

© 2026 Kawasaki Motors Corp., U.S.A.

2017 KLX®110L

PARTS LIST

Engine Mount

ITEM NAME	PART NUMBER	QUANTITY
HOLDER,BATTERY (Ref # 13280)	13280-0384	1
GUARD (Ref # 55020)	55020-0527	2
BOLT,FLANGED,10X125 (Ref # 92001)	92001-1720	2
BOLT,FLANGED,10X105,BLACK (Ref # 92001A)	92001-1751	1
PLUG (Ref # 92066)	92066-1081	2
ROLLER,CHAIN GUIDE (Ref # 92122)	92122-0023	1
BOLT,FLANGED,6X20 (Ref # 92150)	92150-1339	2
COLLAR (Ref # 92152)	92152-0789	2
COLLAR,10.3X12.7X25 (Ref # 92152A)	92152-0831	1
BOLT,SOCKET,8X42 (Ref # 92154)	92154-0309	1
WASHER,8.5X20X2.3 (Ref # 92200)	92200-1055	1
NUT,6MM (Ref # 92210)	92210-0218	2
NUT,LOCK,FLANGED,10MM (Ref # 92210A)	92210-1081	3

© 2026 Kawasaki Motors Corp., U.S.A.