2017 KLX®110L

PARTS DIAGRAM

Frame

F2120

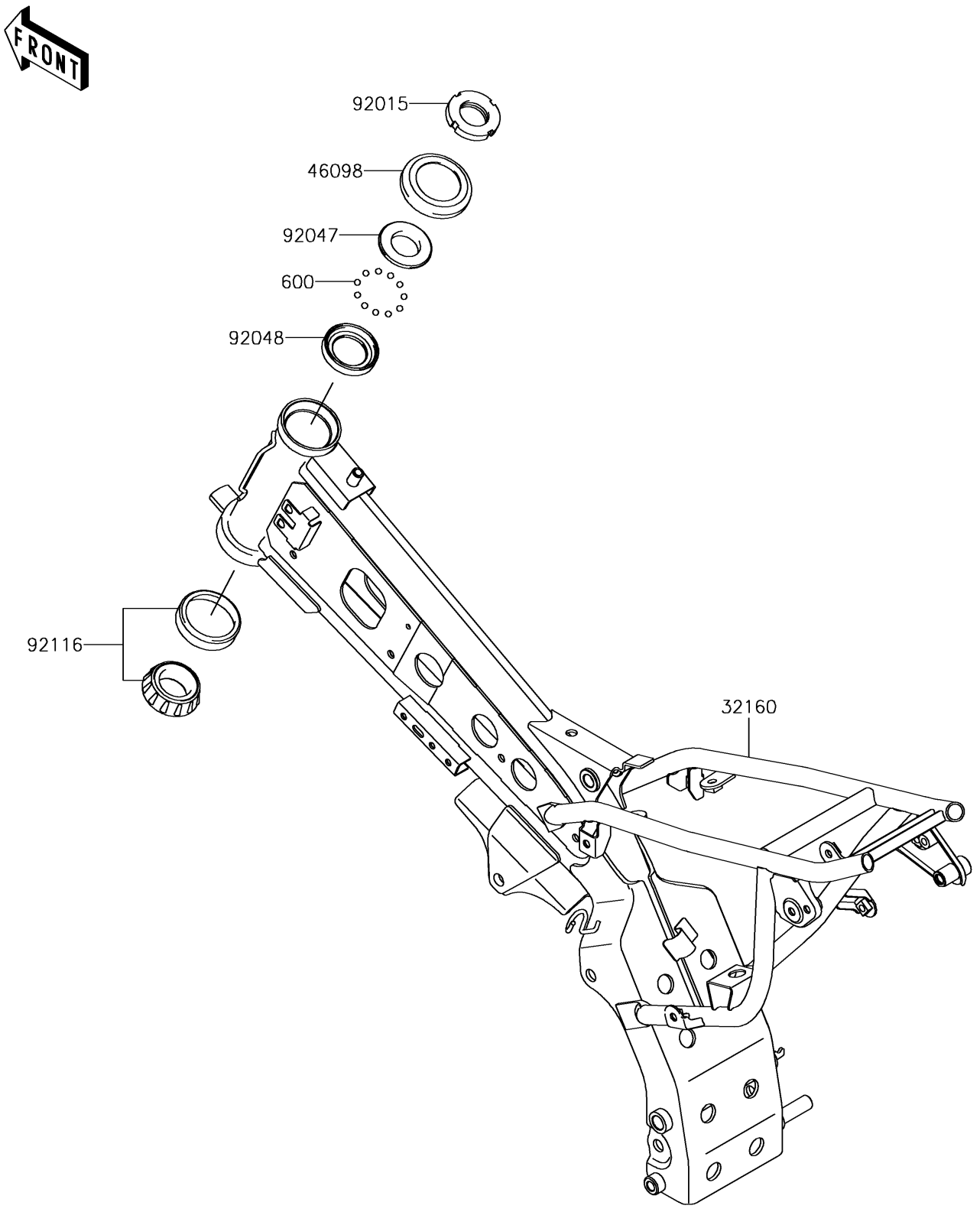

© 2026 Kawasaki Motors Corp., U.S.A.

2017 KLX®110L

PARTS LIST

Frame

ITEM NAME	PART NUMBER	QUANTITY
FRAME-COMP,P.SILVER (Ref # 32160)	32160-0501-458	1
CAP,STEERING STEM (Ref # 46098)	46098-018	1
BALL-STEEL,3/16 (Ref # 600)	600A0600	23
NUT,STEERING LOCK,25MM (Ref # 92015)	92015-1222	1
RACE,STEERING STEM BEARING (Ref # 92047)	92047-014	1
RACE,STEERING STEM BEARING (Ref # 92048)	92048-009	1
BEARING-ROLLER,HR320/28XJ (Ref # 92116)	92116-1009	1

© 2026 Kawasaki Motors Corp., U.S.A.