# 2017 KLX®110L

## PARTS DIAGRAM

### Starter Motor

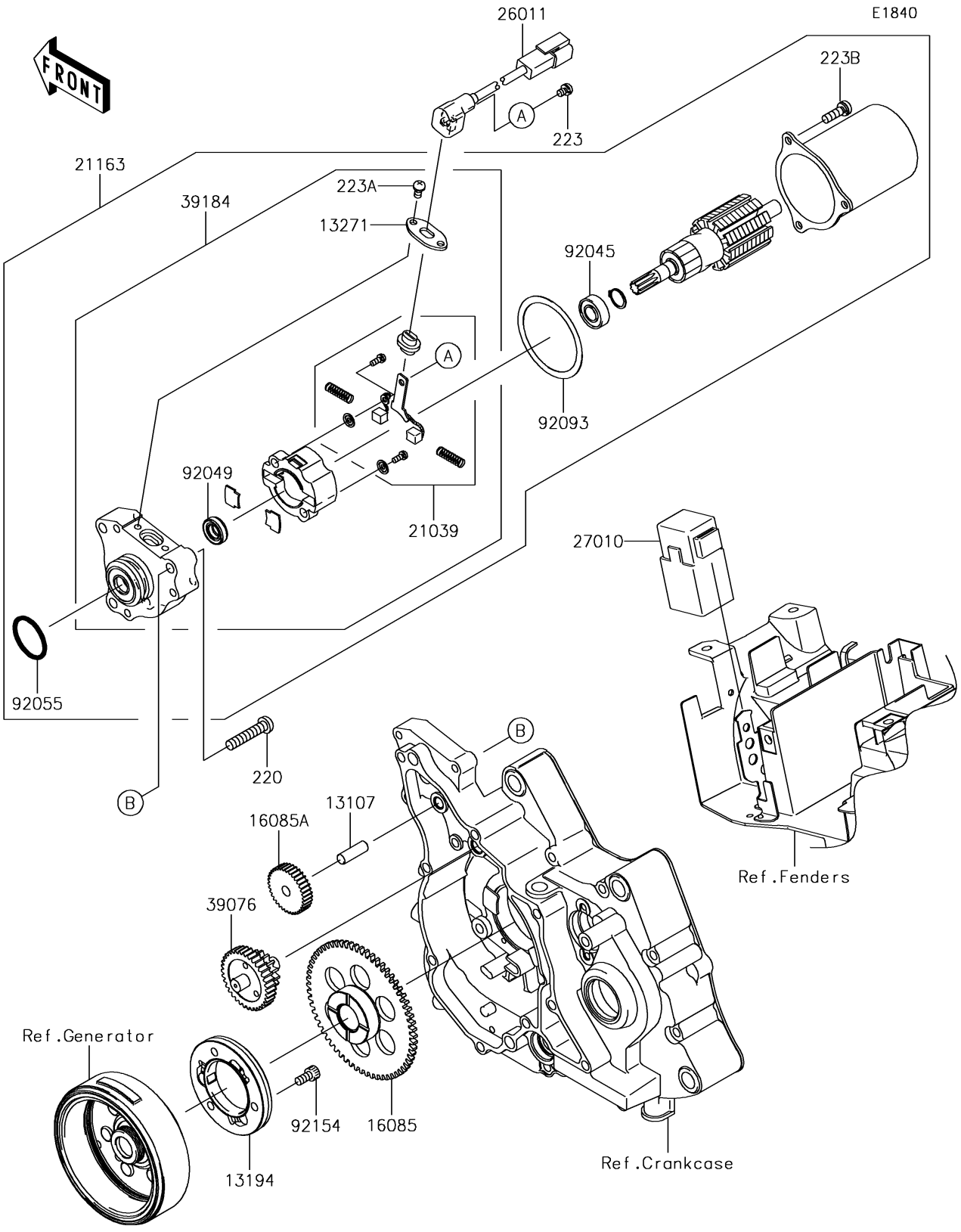


© 2026 Kawasaki Motors Corp., U.S.A.

# 2017 KLX®110L

## PARTS LIST

### Starter Motor

| ITEM NAME | PART NUMBER | QUANTITY |
|---|---|---|
| SHAFT,8X25 (Ref # 13107) | 13107-1142 | 1 |
| CLUTCH-ONEWAY (Ref # 13194) | 13194-0013 | 1 |
| PLATE (Ref # 13271) | 13271-0674 | 1 |
| GEAR (Ref # 16085) | 16085-0136 | 1 |
| GEAR,IDLE,45T (Ref # 16085A) | 16085-0593 | 1 |
| BRUSH,STARTER MOTOR(SET) (Ref # 21039) | 21039-1067 | 1 |
| STARTER-ELECTRIC (Ref # 21163) | 21163-0049 | 1 |
| SCREW-PAN-CROS,6X30 (Ref # 220) | 220AD0630 | 3 |
| SCREW-PAN-WS-CROS,4X6 (Ref # 223) | 223AA0406 | 1 |
| SCREW-PAN-WS-CROS,4X8 (Ref # 223A) | 223AA0408 | 2 |
| SCREW-PAN-WS-CROS,5X16 (Ref # 223B) | 223AA0516 | 3 |
| WIRE-LEAD (Ref # 26011) | 26011-0249 | 1 |
| SWITCH (Ref # 27010) | 27010-0085 | 1 |
| LIMITER (Ref # 39076) | 39076-0022 | 1 |
| BRACKET-ASSY (Ref # 39184) | 39184-0014 | 1 |
| BEARING-BALL,STARTER MOTOR (Ref # 92045) | 92045-1349 | 1 |
| SEAL-OIL,STARTER MOTOR (Ref # 92049) | 92049-1465 | 1 |
| RING-O (Ref # 92055) | 92055-1276 | 1 |
| SEAL,STARTER MOTOR (Ref # 92093) | 92093-1079 | 1 |
| BOLT (Ref # 92154) | 92154-0325 | 3 |

© 2026 Kawasaki Motors Corp., U.S.A.