2018 KLX®110L

PARTS DIAGRAM

Ignition System

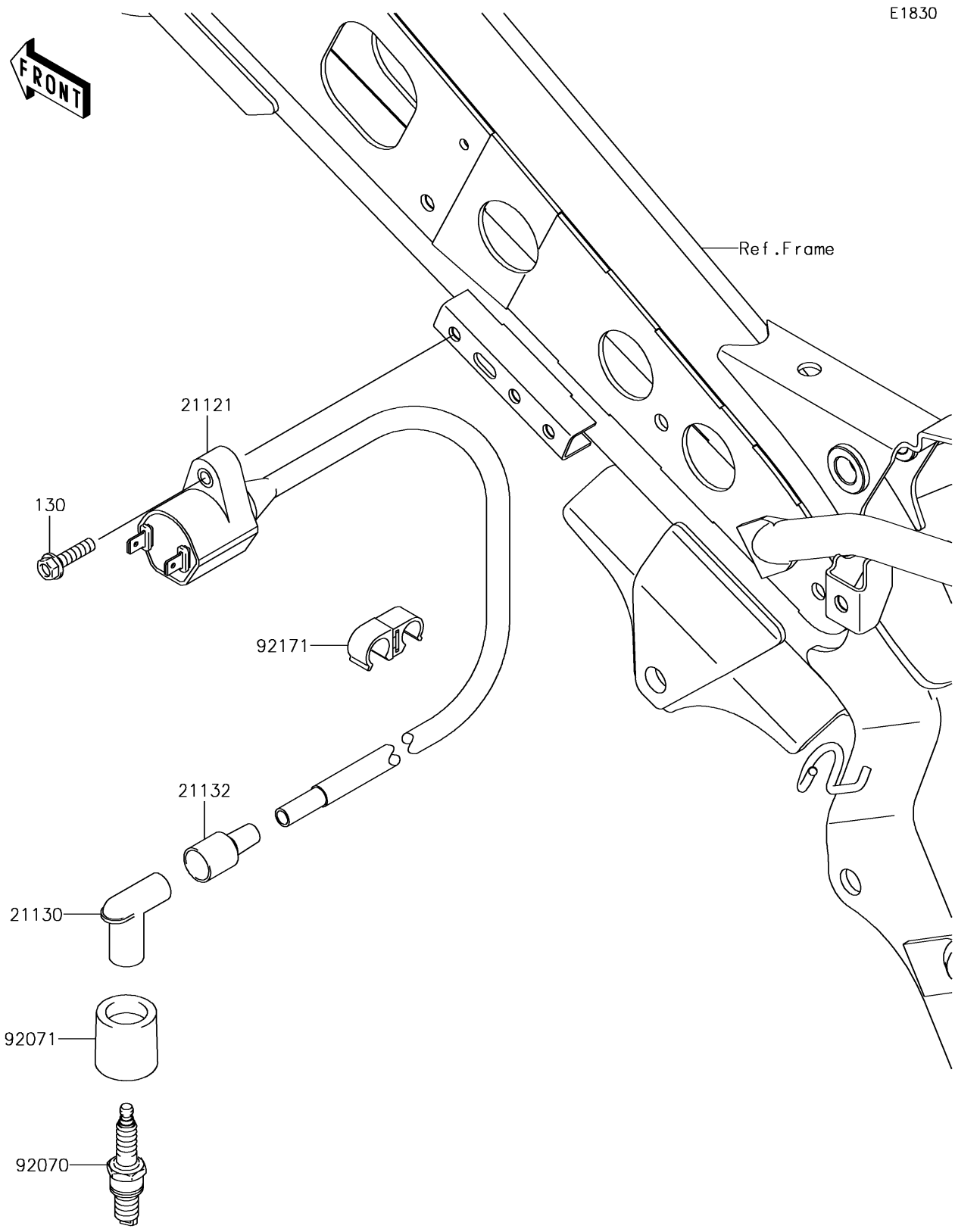

© 2026 Kawasaki Motors Corp., U.S.A.

2018 KLX®110L

PARTS LIST

Ignition System

ITEM NAME	PART NUMBER	QUANTITY
BOLT-FLANGED,5X20 (Ref # 130)	130BA0520	1
COIL-IGNITION (Ref # 21121)	21121-1311	1
CAP-SPARK PLUG (Ref # 21130)	21130-1003	1
GROMMET,HIGH TENSION (Ref # 21132)	21132-005	1
PLUG-SPARK,CR6HSA(NGK) (Ref # 92070)	92070-0023	1
GROMMET,PLUG CAP (Ref # 92071)	92071-1184	1
CLAMP (Ref # 92171)	92171-1487	1

© 2026 Kawasaki Motors Corp., U.S.A.